6/17
RD20018,Rev 12

OPERATORS MANUAL

Demco

Kar-Kaddy SS
DISC BRAKES

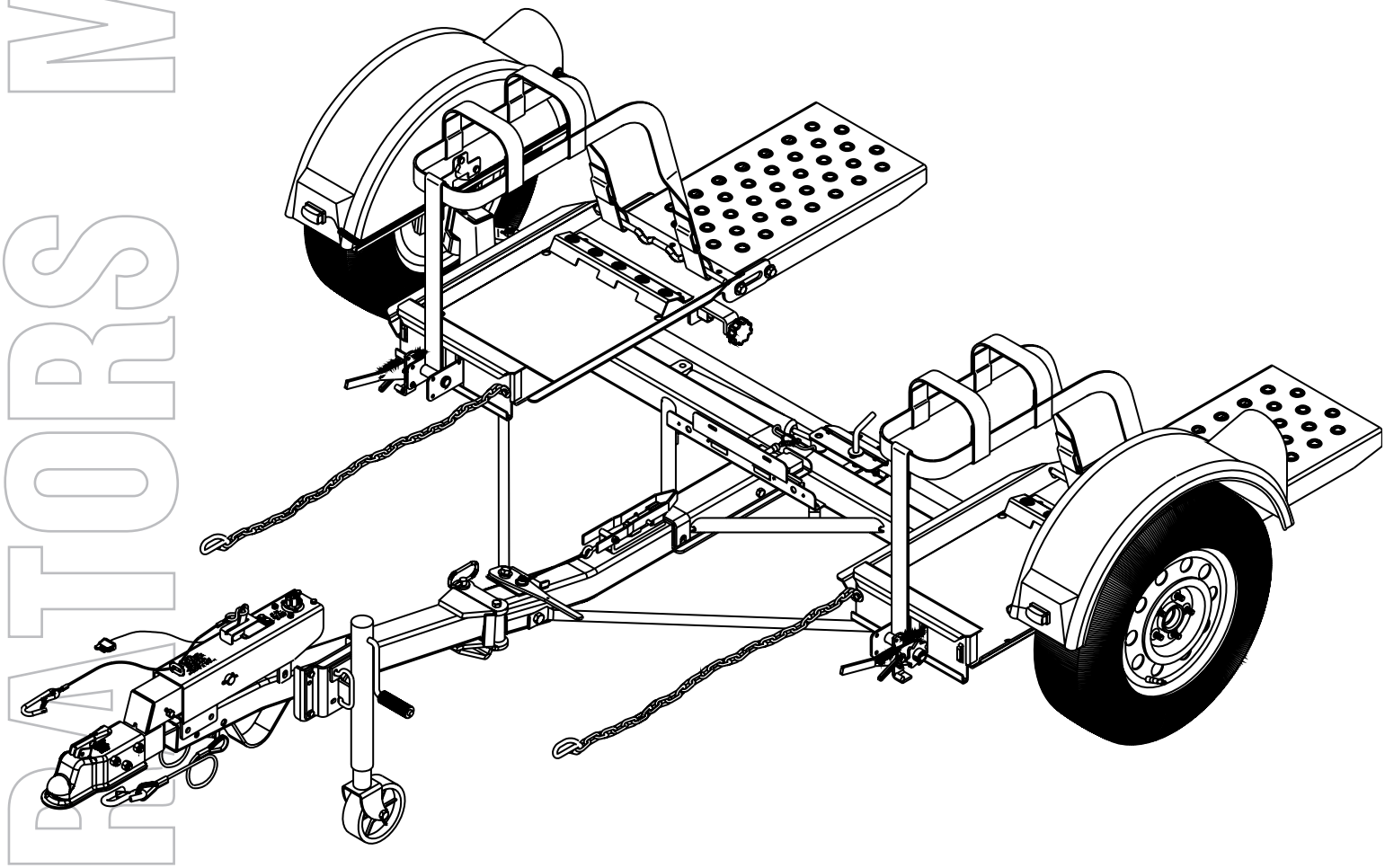

ASSEMBLY
CALIBRATION
OPERATION
REPLACEMENT PARTS

READ *complete manual CAREFULLY BEFORE attempting operation.*

Doing Our Best To Provide You The Best

Introduction

Thank you for purchasing a Demco Kar-Kaddy. We feel you have made a wise choice and hope you are completely satisfied with your new piece of equipment.

WARRANTY POLICY, OPERATOR MANUALS & REGISTRATION

Go online to www.demco-products.com to review Demco warranty policies, operator manuals and register your Demco product.

GENERAL INFORMATION

1. Unless otherwise specified, high-strength (grade 5) (3 radial-line head markings) hex head bolts are used throughout assembly of this piece of equipment.

2. Whenever the terms **"LEFT"** and **"RIGHT"** are used in this manual it means from a position behind the Kar-Kaddy and facing forward.

3. When placing a parts order, refer to this manual for proper part numbers and place order by **PART NO. and DESCRIPTION.**

TABLE OF CONTENTS

General Information ..... Page 2
Tow Dolly Safety Guide ..... Page 3-8
Decal Location ..... Page 9
Bolt Torque ..... Page 10
Tongue and Ramp Assembly ..... Page 11
Fender Assembly Instructions ..... Page 12
Wiring Diagram ..... Page 13
Testing Lights ..... Page 13
Tongue Folding ..... Page 14
Folding Ramps ..... Page 15-16
Loading Angle Clearance Guide ..... Page 16
Safety, Maintenance, & Important Loading Instructions ..... Page 17
Loading Instructions ..... Pages 18 -20
Toe-In Adjustment ..... Page 21
Kar-Kaddy Breakdown Parts Assembly Instructions ..... Page 22 - 23
DA91 Brake Actuator Parts Breakdown and List ..... Page 24
10" Disc Brake Parts Breakdown and List ..... Page 25
Brakes Line Parts Breakdown and List ..... Page 26
Winch & Tilt-Bed Parts Breakdown ..... Page 27
Ramp Latch & License Plate Bracket Parts Breakdown ..... Page 28
Fender Parts Breakdown ..... Page 29
Spare Tire w/Mounting Bracket & Light Bar (optional) Parts Breakdown ..... Page 30
Deflector (optional) Parts Breakdown ..... Page 31

"Reporting Safety Defects"

If you believe that your vehicle has a defect which could cause a crash or could cause injury or death, you should immediately inform the National Highway Traffic Safety Administration (NHTSA) in addition to notifying Demco Manufacturing Company (DEMCO).

If NHTSA receives similar complaints, it may open an investigation, and if it finds that a safety defect exists in a group of vehicles, it may order a recall and remedy campaign. However, NHTSA cannot become involved in individual problems between you, your dealer, or (DEMCO).

To contact NHTSA, you may either call the Auto Safety Hot line toll-free at 1-800-424-9393 (or 366-0129 in Washington, D.C. area) or write to:

NHTSA,
U.S. Department of Transportation
Washington, D.C. 20590.

You can also obtain other information about motor vehicle safety from the Hot line.

SAFETY

TAKE NOTE! THIS SAFETY ALERT SYMBOL FOUND THROUGHOUT THIS MANUAL IS USED TO CALL YOUR ATTENTION TO INSTRUCTIONS INVOLVING YOUR PERSONAL SAFETY AND THE SAFETY OF OTHERS. FAILURE TO FOLLOW THESE INSTRUCTIONS CAN RESULT IN INJURY OR DEATH.

THIS SYMBOL MEANS

-ATTENTION

-BECOME ALERT

-YOUR SAFETY IS INVOLVED!

SIGNAL WORDS

This manual uses the following signal words--**DANGER**, **WARNING**, and **CAUTION**-- with safety messages. The appropriate signal word has been selected using the following guidelines.

DANGER:

Indicates an imminently hazardous situation that, if not avoided, will result in death or serious injury. This signal word is to be limited to the most extreme situations typically for tow dolly components which, for functional purposes, cannot be guarded.

WARNING:

Indicates a potentially hazardous situation that, if not avoided, could result in death or serious injury, and includes hazards that are exposed when guards are removed. It may also be used to alert against unsafe practices.

CAUTION:

Indicates a potentially hazardous situation that, if not avoided, may result in minor or moderate injury. It may also be used to alert against unsafe practices.

If you have questions not answered in this manual, or require additional copies, please contact your dealer or Demco, 4010 320th Street, Boyden, IA 51234, ph: (712) 725-2311
Toll Free: 1-800-543-3626 Fax: (712) 725-2380 http://www.demco-products.com

TOW DOLLY USER GUIDE

WARNING: Read the following information completely before hooking up, loading, using unloading or unhooking this Tow Dolly.

FAILURE TO FOLLOW THESE SAFETY INSTRUCTIONS MAY LEAD TO DAMAGE TO PROPERTY, SEVERE PERSONAL INJURY, AND/OR DEATH.

- Read towing instructions in towed vehicle's owner's manual.
- Read towing instructions in towing vehicle's owner's manual. Be certain that your towing vehicle has the capacity to tow a tow dolly and towed vehicle combination. IF YOU HAVE ANY QUESTIONS ABOUT THIS, DO NOT TOW. CONSULT YOUR DEALER OR CALL DEMCO.
- Use a 2", 6000 lb. (or greater) capacity ball for a tow dolly.
- Make sure towing vehicle's parking brake is fully engaged before starting hookup, loading, unloading, or unhooking of tow dolly.
- Do not load towed vehicle onto tow dolly until tow dolly is completely and properly hooked up to towing vehicle and setting on a level surface.
- Tail lights and stop lights must be hooked up and operating properly at all times.
- Do not load a towed vehicle that exceeds weight or size limits of tow dolly.
- Always have someone safely guide you when driving towed vehicle onto tow dolly.
- Be sure tires of your towed vehicle and tow dolly are in good condition and inflated to proper pressures. Tire pressure may increase during travel—do not bleed off extra pressure.
- Do not back up your towing vehicle when a tow dolly is attached. A tow dolly swivels both at the coupler and at car platform. If you must back up, unload towed vehicle first, disconnect tow dolly and move vehicle and tow dolly separately. Park where you can pull ahead when leaving.
- Do not exceed 55 miles per hour, or any lower posted speed limit.
- Avoid sharp turns or swerves.
- Braking distance increases when using a tow dolly. Use caution and always allow sufficient distance for braking.
- Do not transport passengers or cargo in vehicle being towed.
- Do not unhook tow dolly from towing vehicle until towed vehicle is completely unloaded from tow dolly.
- Allow one tow-vehicle/tow dolly/vehicle-in-tow length for each 10 m.p.h. behind another vehicle.
- ALWAYS check the hitch, tow dolly and vehicle-in-tow at each stop to insure that coupling, chains and tie down equipment remain tight and properly attached. Use tow dolly checklist as an aid.
- NEVER tow without properly installed tire straps and security chains properly attached to frame or other structural member of vehicle-in-tow.
- ALWAYS slow down—40 miles per hour or less—for curves, wet or rough roads, and downgrades. On downgrades, shift into a lower gear and allow engine to help hold speed down.
- ALWAYS be rested. NEVER drive when fatigued.
- AVOID driving at night. Night drivers have three times the fatality rate of day drivers.
- NEVER continue to operate an unstable (swaying or whipping) combination. If this occurs, slowly pull over, reducing speed through your engine rather than braking. When stopped in an off the road location check hitch, tire straps, and chains.
- NEVER pass on hills or curves. Beware of cross winds and wind gusts from passing vehicles.
- NEVER transport passengers or cargo in towed vehicle.
- ALWAYS load vehicle-in-tow facing forward. NEVER back onto tow dolly. For maximum stability steering axle must be on tow dolly.

- ALWAYS disconnect drive shaft of a rear wheel drive/front engine vehicle-in-tow at differential to avoid transmission damage. Secure disconnected parts.
- ALWAYS ensure vehicle-in-tow parking brake is disengaged before towing.
- ALWAYS keep children, pets, and bystanders clear of area while loading and unloading.

THE MOST IMPORTANT PART - IS YOU

Will you read and follow these instructions on how to safely operate this DEMCO Tow Dolly?

If your answer is YES, we thank you for your attitude and believe your towing experience will be a safe and pleasant one.

SAFETY CHECKLIST

While Stopped Check
- That Hitch is Tight
- That Hitch Ball is Tight
- Coupler Lever Lock
- Are Tire Tie Down Straps Tight
- Are Hitch Safety Chains and Vehicle-in-Tow Frame Security Chains Properly Attached
- Are Tire Pressures OK
- Vehicle-in-Tow for Working Lights
- Are Drive Shaft and Battery Cable Disconnected and Secured If Required When On the Road:
- Reduce Speed
- Think Ahead
- Allow for extra length when turning
- Anticipate Stops/Brake Early
- Stop Often for Rest
- Use Safety Checklist at Each Stop

TOWING VEHICLE SIZE AND TOWING CAPACITY

Towing vehicle must weigh at least 1,000 lbs. more than weight of vehicle-in-tow and tow dolly.

Suspension

Your tow vehicle's rear springs must be of sufficient strength to support the added loaded tow dolly tongue weight while maintaining tow vehicle in approximately a level position. If rear springs, shock absorbers, or struts, are weak or broken, they must be replaced. In some cases, it may be necessary to add helper springs or air shocks to help support weight properly. Poor wheel alignment, loose steering or worn suspension components can also adversely affect vehicle handling and stability.

Sport Utility Vehicles

Exercise caution when towing with a sports utility (e.g., Jeep or Bronco) type vehicle. Some of these vehicles have a higher than normal center of gravity, and a short wheelbase. This gives them different handling characteristics than the average car or truck.

Tires

Tow dolly tires should be load range C tires inflated to 50 psi. These are COLD pressures, and will increase when tires are hot from running. DO NOT bleed off this pressure increase. Incorrect tire pressure can adversely affect vehicle handling and gas mileage.

Mirrors

State laws require vehicles towing a tow dolly to be equipped with mirrors on both sides. Inadequate side mirrors create a hazard by limiting rearward vision. If your vehicle is not already so equipped, you should put right and left hand full view, detachable mirrors on. Ask dealer if it has any available for rent if you do not want to purchase them.

Engine and Transmission Cooling

Towing a loaded tow dolly can be quite demanding on engine and transmission cooling systems of tow vehicle, especially if towing long distance or in hilly terrain. Be sure your cooling system is in top shape, and adequate for towing anticipated load. Engine oil should be fresh and of maximum viscosity recommended for your particular engine. Engine cooling may be enhanced by flushing system and installing fresh coolant. Automatic transmissions may need an external oil cooler installed for unusually difficult or extended towing.

Engine and transmission heat increase as vehicle speed increases. To maintain proper cooling, do not exceed 55 m.p.h. regardless of engine size or load.

Hitch

Be certain that hitch and hitch ball are securely attached and that hitch ball is 2" in diameter. A minimum rating of class III (6000 lbs) is required for both hitch and hitch ball.

Some sports utility vehicles are equipped with a bumper type hitch from the factory. DO NOT USE THESE HITCHES, since bumper may not have sufficient structural capacity to handle the load. Equip your vehicle with a hitch attached to the undercarriage of your vehicle.

Lights

Lights are required on tow dollies in every state. If your vehicle is not already equipped for tow dolly light hook-up, it will be necessary to install connections now. Your dealer will let you know exactly what is needed for your particular vehicle.

Tow Vehicle Loading

A loaded tow dolly tongue weight (approximately 200 lbs.) contributes to total cargo weight of tow vehicle. Tow vehicle manufacturer's recommended maximum passenger/cargo load must not be exceeded.

VEHICLE-IN-TOW

Limitations/Cautions

1. Vehicle-in-tow must not be wider than 76 inches at front doors to prevent damage to doors from contact with tow dolly fenders on turns.

2. Vehicle-in-tow must weigh no more than 4,800 lbs.

Exceeding these limits may cause damage to tow dolly or vehicles.

Vehicle-in-tow tire tread must fit on ramps without overhanging sides. Tire tread width or body width of towed vehicle must not exceed 76" maximum outside to outside and 42" minimum inside to inside.

Low hanging spoilers and air dams may be damaged by contact with tow dolly ramps when loading and unloading. Be sure there is adequate clearance for these. If not, they must be removed before loading.

Vehicle-in-Tow Facing Forward

Vehicle-in-tow must always be facing forward (front wheels on tow dolly).

Transmission Damage to Towed Vehicles

When towing a rear axle driven front engine vehicle, the drive shaft must be disconnected to prevent transmission damage. Simply placing transmission in neutral is not sufficient and will not prevent damage due to a lack of internal lubrication. You must disconnect drive shaft at rear axle and tie or wire it up. The universal joint bearing caps must be taped on to prevent loss of bearings. If you choose to remove drive shaft entirely, it may be necessary to cap transmission tail shaft to prevent fluid loss and possible future damage. Consult your vehicle owner's manual.

Front wheel drive vehicles need not have drive shafts disconnected because the drive wheels are loaded on tow dolly.

Towing damages many rear engine vehicle with transaxles. Consult owner's manual for tow suitability.

Passengers And Cargo Prohibited in the Vehicle-in-Tow

Never transport any passengers or cargo in towed vehicle. In addition to being illegal in most states, carrying passengers in a towed vehicle exposes those passengers to risk of exhaust gas asphyxiation.

Lighting Requirements

Even though tow dollies have operating lights, law requires that a vehicle-in-tow be equipped with functioning stop, turn and running lights. Detachable vehicle-in-tow towing lights can be purchased at many rental locations. They can also be purchased at auto supply shops. Follow instructions carefully when installing.

TOW DOLLY HOOK UP

ALWAYS FOLLOW HOOK-UP, LOADING, AND UNLOADING INSTRUCTIONS ON FENDER DECALS OF TOW DOLLY. IF YOUR TOW DOLLY DOES NOT HAVE INSTRUCTIONS OR IF THEY ARE ILLEGIBLE, ASK COMPANY FOR A LEGIBLE COPY.

TOWING
55 Miles Per Hour Max.

All vehicle combinations have a speed beyond which adequate emergency control cannot be assured. Maximum recommended speed for all tow dolly combinations is 55 m.p.h. **under good road conditions**. As road conditions deteriorate you must reduce the maximum recommended speed.

Posted speed limit is usually the same for trucks and car-trailer combinations. Observe this limit even if it is less than 55 m.p.h.

Please do not be lulled into a false sense of security because your tow dolly tows easily at higher speeds. A road hazard that would be avoidable at 55 m.p.h. can become unavoidable at 65 m.p.h.

If you drop any wheel(s) off the pavement, don't attempt any sharp steering corrections.

Remain off the pavement, decrease your speed until you have regained control, then drive slowly back onto pavement.

Never Operate An Unstable Combination

Instability (swaying or whipping) of a tow vehicle/ tow dolly combination at low speeds usually increases at higher speeds. If combination begins to whip or sway, steer straight ahead, take your foot OFF the throttle, but **do not brake** until combination has stabilized. Stop in an off the road location and check tow vehicle and tow dolly as soon as possible.

- Review all instructions and be sure you have complied.
- Check that vehicle on tow dolly is loaded with front wheels on tow dolly. Reload if necessary.
- Check that all chains and tie down equipment remain tight and properly attached.
- Check for proper tire inflation all around combination.
- Make sure trunk or bed of towing and towed vehicles are not loaded with cargo.
- Check wheel bearings and lug nuts on both tow vehicle and tow dolly to be sure a wheel has not become loose.
- Check tow vehicle's wheel alignment.
- Finally, be sure you are not exceeding maximum recommended speed (55 MPH).
- Check coupler and attachment to tow vehicle.

If you have followed preceding instructions, any instability should be corrected. If situation persists, stop and call for professional assistance from a tow truck operator.

BREAKDOWNS

Get Off The Road

Immediately park tow vehicle-tow dolly combination in a safe place completely off the highway. Get all occupants out of vehicle and away from roadway.

If you must continue on the highway to reach a safe place off the road, turn on emergency flashers and proceed with caution.

Do not hesitate to proceed on a flat tire if necessary to reach a safe place completely off the highway. Proceed slowly, for road friction could ignite a flat tire and cause a fire.

Rough Roads

To prevent damage to tow vehicle or tow dolly, reduce speed when towing tow dolly over rough roads.

Turning

Avoid U-turns. Avoid turning too sharply. Turning too sharply may cause side of vehicle-in-tow to come in contact with rear of dolly fender and cause damage to both vehicles.

"Pro" Driving Tips

Accidents occur more frequently at night with a tired driver exceeding recommended speed on a downgrade, wet road, or curve. Don't attempt to drive "straight through." Be rested. Slow down for down-grades, wet roads or curves. Night drivers have three times the fatality rate of day drivers. Avoid driving at night.

ACCIDENTS

Move all vehicles completely off the road.
Get everyone out of the vehicle and off the road. Call police.

Demco wants you
to have a safe towing experience.

Read these instructions carefully,
read fender decals on tow dolly,
and follow all instructions.

Decal Location

PINCH POINT

REV 0 DD21018

A. DD21018

KARKADDY™ SS By Demco

DD21017 Rev 1

D. DD21017 QTY. 4

⚠ WARNING

To prevent serious injury or death.

Make sure tongue is in forward locked position with locking pin and retainer clip properly installed before hooking up or loading.

REV 0 DD21019

B. DD21019 QTY. 1

⚠ CAUTION

Actuator is spring loaded. Use care when servicing or injury may occur.

REV 1 NP21010

G. NP21010 Qty. 1

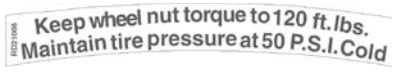

F. RD21008 QTY. 2

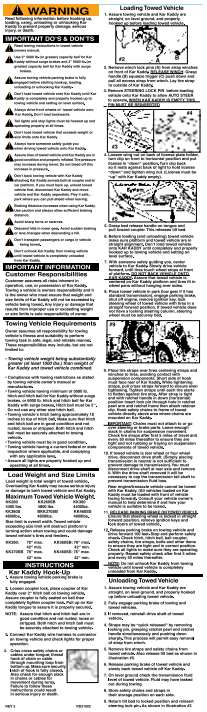

E. RD21002 QTY. 1

ATTENTION

This brake actuator is specially designed for use with disc brakes ONLY.

Any replacement of this unit MUST be of the same design.

REV 1 BD21001

H. BD21001 Qty. 1

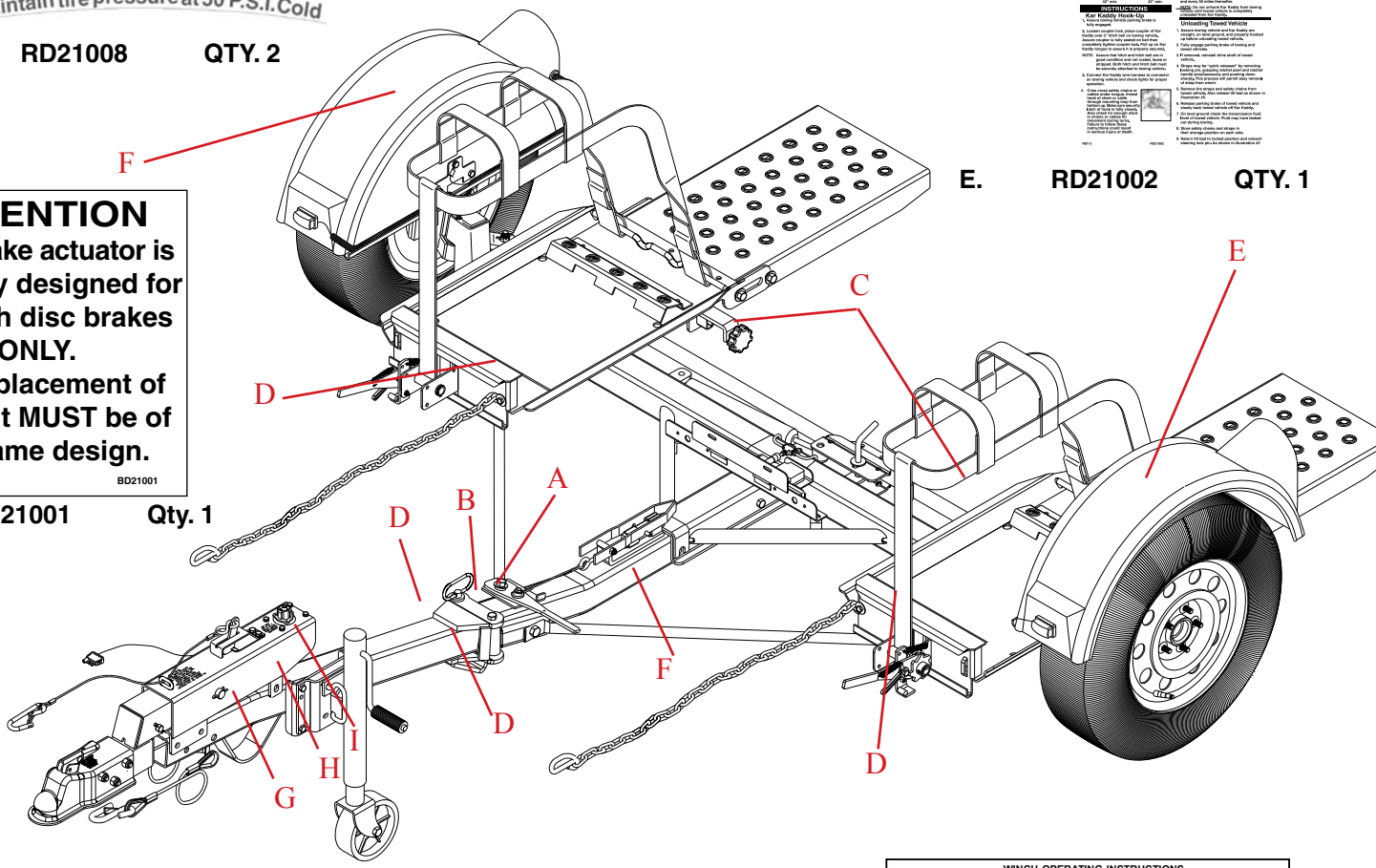

PULL & LIFT TO FOLD RAMP

Rev 0 DD21020

C. DD21020 QTY. 2

BRAKES ON DO NOT TOW | **BRAKES OFF TOWABLE**

BH21003

I. BH21003 Qty 1

WINCH OPERATING INSTRUCTIONS

Remove winch lock pins (**A**) from strap winches on front of tow dolly.

Release winch: Grasp handle (**B**) squeeze trigger (**C**) push down and pull all excess strap from winch. Lay tire strap to outside of tow dolly.

Tighten straps: Place tire straps over tires centering straps and winches to tires. While tightening straps, pull cross straps forward to ensure even tightening. Tighten straps until each tire starts to flatten against tire stop. After strap is tight, insert lock pin and make sure handle is in horizontal position.

REV 2 DD21016

F. DD21016 QTY. 2

BOLT TORQUE
TORQUE DATA FOR STANDARD NUTS, BOLTS, AND CAPSCREWS.

Tighten all bolts to torques specified in chart unless otherwise noted. Check tightness of bolts periodically, using bolt chart as guide. Replace hardware with same grade bolt.

NOTE: Unless otherwise specified, high-strength Grade 5 hex bolts are used throughout assembly of equipment.

Torque Specifications

Torque Lug Nuts to 120 FT/LBS

Bolt Torque for Standard bolts *

	GRADE 2		GRADE 5		GRADE 8	
"A"	lb-ft	(N.m)	lb-ft	(N.m)	lb-ft	(N.m)
1/4"	6	(8)	9	(12)	12	(16)
5/16"	10	(13)	18	(25)	25	(35)
3/8"	20	(27)	30	(40)	45	(60)
7/16"	30	(40)	50	(70)	80	(110)
1/2"	45	(60)	75	(100)	115	(155)
9/16"	70	(95)	115	(155)	165	(220)
5/8"	95	(130)	150	(200)	225	(300)
3/4"	165	(225)	290	(390)	400	(540)
7/8"	170	(230)	420	(570)	650	(880)
1"	225	(300)	630	(850)	970	(1310)

Bolt Torque for Metric bolts *

	CLASS 8.8		CLASS 9.8		CLASS 10.9	
"A"	lb-ft	(N.m)	lb-ft	(N.m)	lb-ft	(N.m)
6	9	(13)	10	(14)	13	(17)
7	15	(21)	18	(24)	21	(29)
8	23	(31)	25	(34)	31	(42)
10	45	(61)	50	(68)	61	(83)
12	78	(106)	88	(118)	106	(144)
14	125	(169)	140	(189)	170	(230)
16	194	(263)	216	(293)	263	(357)
18	268	(363)	--	--	364	(493)
20	378	(513)	--	--	515	(689)
22	516	(699)	--	--	702	(952)
24	654	(886)	--	--	890	(1206)

Torque 11MM caliper bolts to 40 ft/lbs

Torque figures indicated are valid for non-greased or non-oiled threads and heads unless otherwise specified. Therefore, do not grease or oil bolts or capscrews unless otherwise specified in this manual. When using locking elements, increase torque values by 5%.

* GRADE or CLASS value for bolts and capscrews are identified by their head markings.

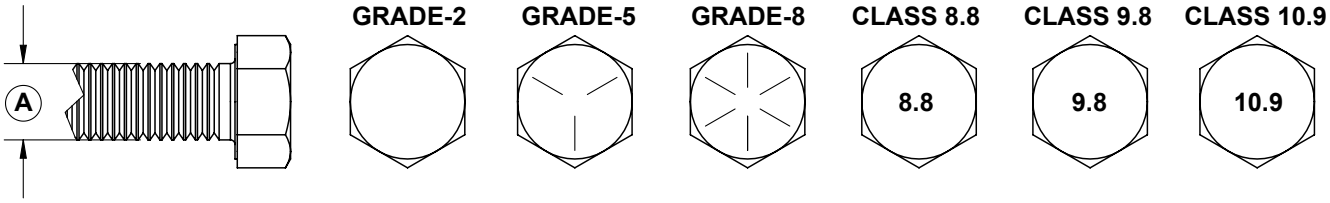

Tongue and Ramp Assembly Instructions

1. Place the main frame (#1) on blocks or some other sturdy support so that the frame rests approximately 8" - 10" off the ground.

2. With an assistant, place tongue assembly (#2) into main frame channel and position latch on tongue approximately 3" from front of channel. Clamp tongue to main frame and support front of tongue.

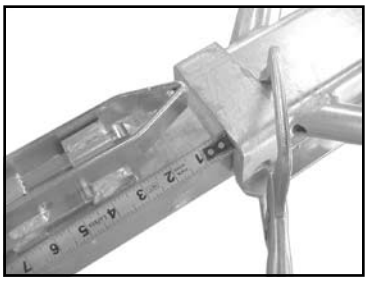

3. Locate the four bullet connectors extending out the back of the tongue and plug into the connector protruding from under the main frame channel. Plug into the flat four connector by matching the colors. Do not cross colors when making this connection. Make sure that the two pigtails for the license plate bracket are out.

4. Using the open end of a 9/16" wrench to support the back of the male coupler, (as shown below) push drip free quick couplers together. **NOTE:** When pushing the male connector into the female connector, the female knurl collar will snap towards male connector automatically, locking the connection.

5. With an assistant, mount the tongue assembly (#2) to the front of the Kar Kaddy main frame and use a 5/8" x 4-1/2" grade 5 bolt (#3) and lock nut (#4)(torque to 50 ft. lbs). Do not torque over 50 ft. lbs. or bed will not tilt.
NOTE: Brake line and wiring must be above bolt also coupler assembly must be ahead of bolt. Do this by opening tongue about half way.

6. Lay the bracing struts (#5) out along the tow dolly tongue with the back end (the end with the larger hole in it) of the bracing strut toward the main frame. Loosely bolt the back of each bracing strut to the trailer frame as shown using 1/2" x 1-1/2" grade 5 bolt (#6), flatwasher (#7), pivot bushing (#8) and locknut (#9). Hold up the front end (the end with the smaller hole) of each bracing strut to the tongue and secure with two 5/8" x 1-1/4" epoxied hex head bolts (#10) and nut plate (#14). Torque the 1/2" x 1-1/2" bolt with the pivot bushing to 75 ft. lbs. Torque the two 5/8" x 1-1/4" epoxied hex head bolts to 100 ft. lbs.

7. On the main unit, pull ramp latch (#11) out and up in unlatched position.

8. Use four 1/2" x 1-1/2" bolts (#6), 1/2" flat washers (#7) and yellow plated bushings (#12) and place in the front slotted hole and the rear slotted hole on both sides of ramp (#13). Use four 1/2" nylon lock nuts (#9) and snug these bolts so they can slide up and down in slot.

9. Place ramp (#13) in main frame (#1). Front bolts and bushings go in front open slot of ramp mount. Lift ramp up and push forward until rear bolts and bushings go into rear half slot.

10. Engage Ramp latch (#11) and move ramp around so latch can engage through ramp. With the use of two clamps, secure ramp to main frame. Install the remaining 1/2" x 1-1/2" bolts (#6), flatwashers (#7), yellow bushings (#12), and nylon lock nuts (#9) into the remaining slotted holes.

11. Tighten all six bolts. Pull and lift ramp latch (#11) and pull ramp back and fold up. If ramp is too tight when pulling back, reclamp ramp as in previous step and loosen bolts so ramp lowers away from main frame. Tighten bolts and retry.

12. Repeat steps 7-11 for other side.

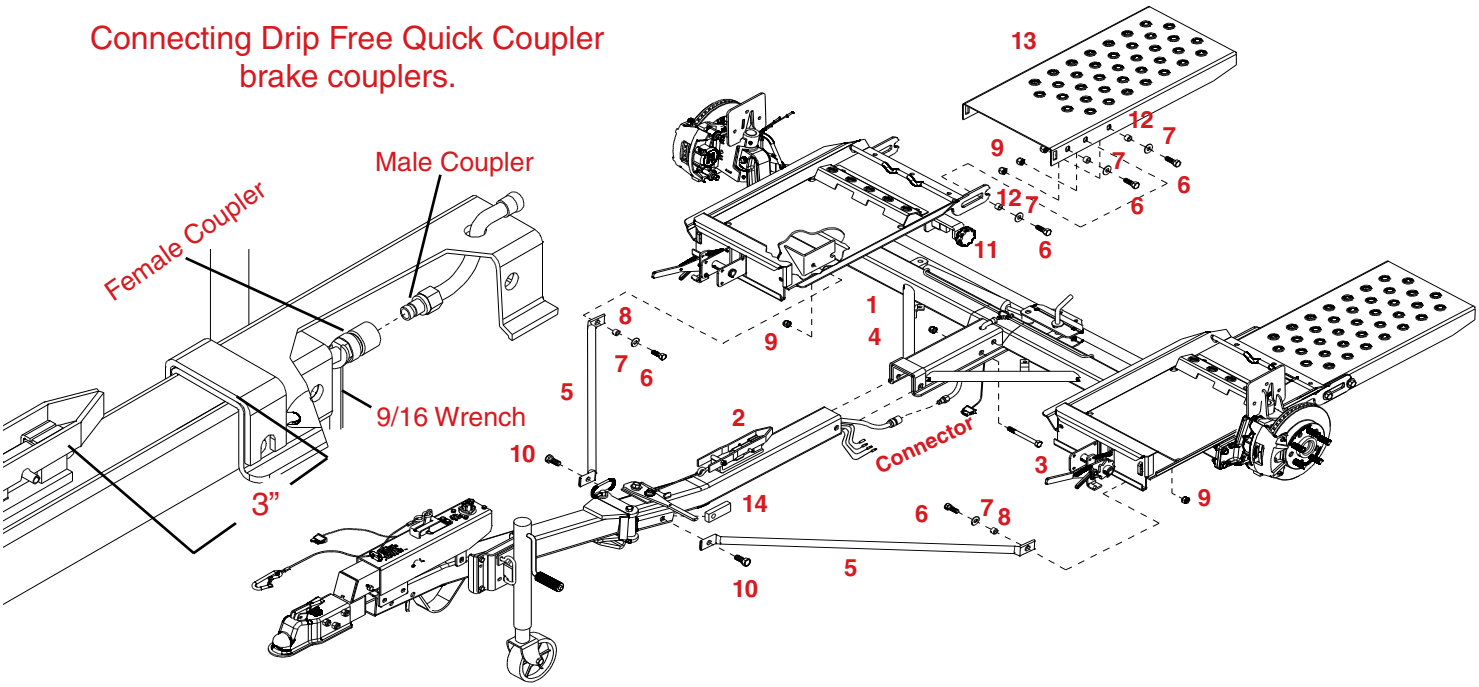

Fender Assembly Instructions

1. Fish the three wires from the mainframe through the rear hole in the fender trough.

2. Route wiring in through back of tail light housing on the bottom inside of housing. Fish the three wire inside of housing. **NOTE:** If fender is equipped with a front marker light, lay wires in trough and route wires through back of tail light housing with main frame wires (see red arrow).

3. Pull all wire from light hole in housing and install the snapper hose clip approximately 1-1/2" back from end of wire shielding. Squeeze snapper clip tight with pliers.

4. Push wires back into housing and finish routing wires in wire trough of fender and attach cable hanger. Install two metal wire clips using pliers. Place one clip 5-1/2" from rear of fender and one 8" from rear of fender (see red arrow).

5. Install rubber grommet (with notch in grommet to the top) and attach 3 wire pigtail harness to fender wiring (bullet connectors). **NOTE:** On the left side, plug in the bullet plugs with white to white, black to brown and yellow to red. On the right side, plug in bullet plugs with white to white, black to brown and green to red.

6. If equipped with front marker light, attach wires using wire splicers, black to black or black to brown depending on which pigail harness and white to white onto the 3 wire pigtail harness. Coil pigtail harness inside of fender housing and plug into 4" round light. Push light into grommet with plug in to the top aligned with notch in grommet.

Wiring Diagram

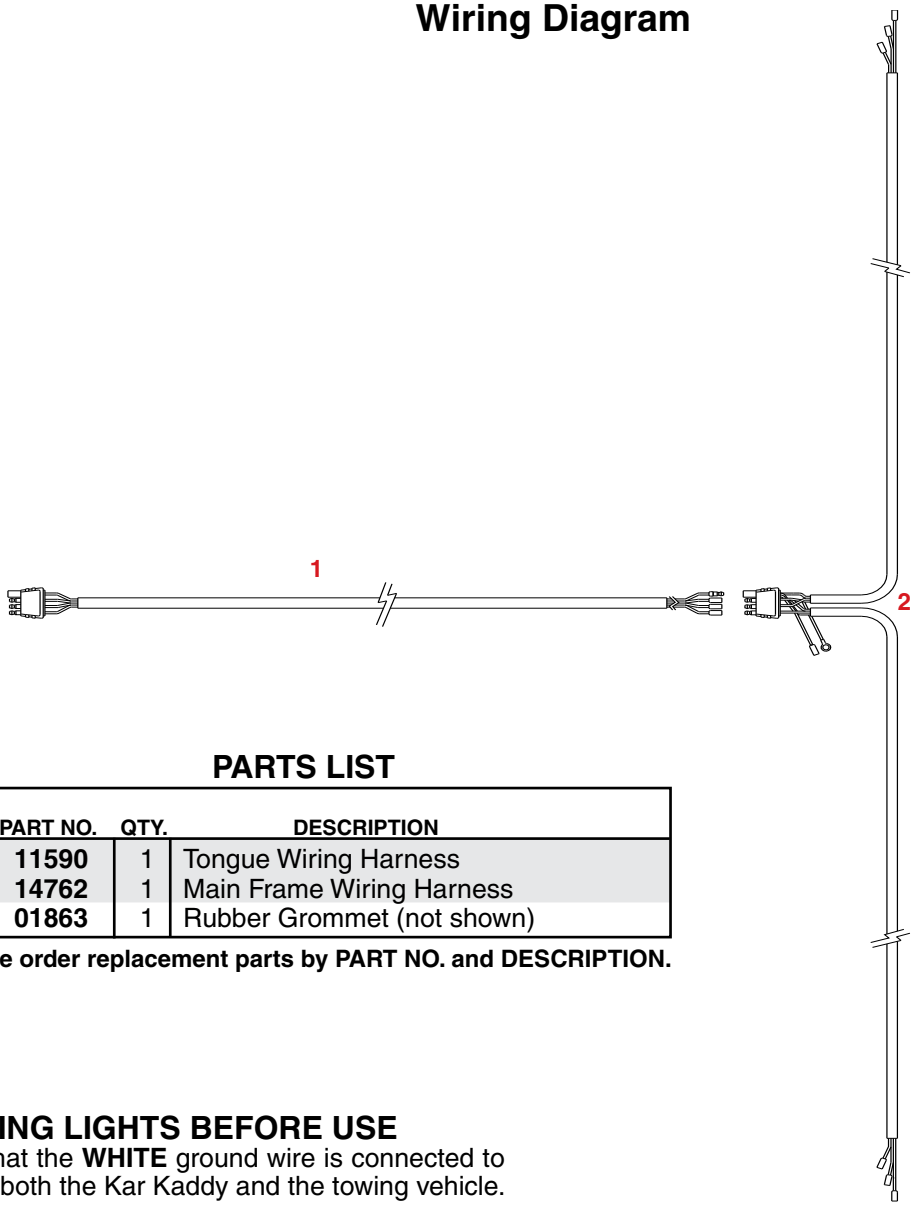

PARTS LIST

REF. NO.	PART NO.	QTY.	DESCRIPTION
1.	**11590**	1	Tongue Wiring Harness
2.	**14762**	1	Main Frame Wiring Harness
3.	**01863**	1	Rubber Grommet (not shown)

Please order replacement parts by PART NO. and DESCRIPTION.

TESTING LIGHTS BEFORE USE

1. Make sure that the **WHITE** ground wire is connected to the frame of both the Kar Kaddy and the towing vehicle.
2. With headlights in **"ON"** position, the tail lights, the light cluster bar, the license plate light, and the clearance lights should be lighted.
3. Start engine and have someone depress brake pedal. Brake lights of tow dolly and towing vehicle should come **"on"** and **"off"** simultaneously with each application.
4. Turn left turn signal on. Left turn light of Kar Kaddy and towing vehicle should flash simultaneously. If turn signal light of the trailer function opposite to those of the towing vehicle, it is probable that the **YELLOW (Driver side)** and **GREEN (Passenger side)** wires have been reversed. Check the plug connection under the tongue of the Kar Kaddy to make sure wire colors are not crossed at that point. If wires are crossed change them to match color for color.

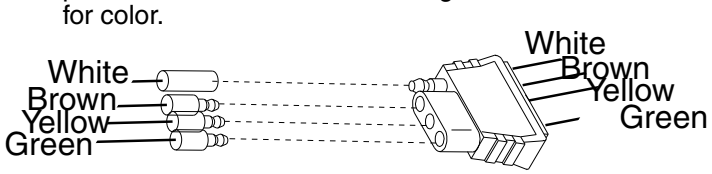

COLOR CODE FOR WIRING HARNESS

WHITE	Ground
BROWN	Tail Lights, License Plate Lights, Light Cluster Bar & Clearance Lights
YELLOW	Left Turn and Stop
GREEN	Right Turn and Stop

WIRING OF THE TOWING VEHICLE

Connect wiring to towing vehicle, keeping in mind the color code indicated below.

1. Make certain towing vehicle lights are **"OFF"**.
2. Connect **YELLOW** wire to left turn signal and stop wire in the left rear of towing vehicle with the wire splicer (01883) supplied.
3. Connect **GREEN** wire to the right turn signal and stop wire.
4. Connect **BROWN** wire to tail light wire.
5. **VERY IMPORTANT** - connect **WHITE** wire to frame body of towing vehicle. This is the common ground, and a clean metal - to - metal contact must be made.

CAUTION: Many flashers for vehicle turn signals will not carry the additional load of Kar Kaddy turn signals. If normal operation does not occur when connected to the Kar Kaddy, a heavy duty replacement flasher may be obtained through auto parts outlets.

Tongue folding and storage

NOTE: Tow Dolly must be empty and unhooked to perform any and all of these steps. Do not attempt while tow dolly is loaded or hooked up.

1. Pull retainer clip from bottom of tongue locking pin. Lift locking pin out of tongue pivot.

2. With tongue wheel jack turned to its lowest position, push/pull tongue to the left.

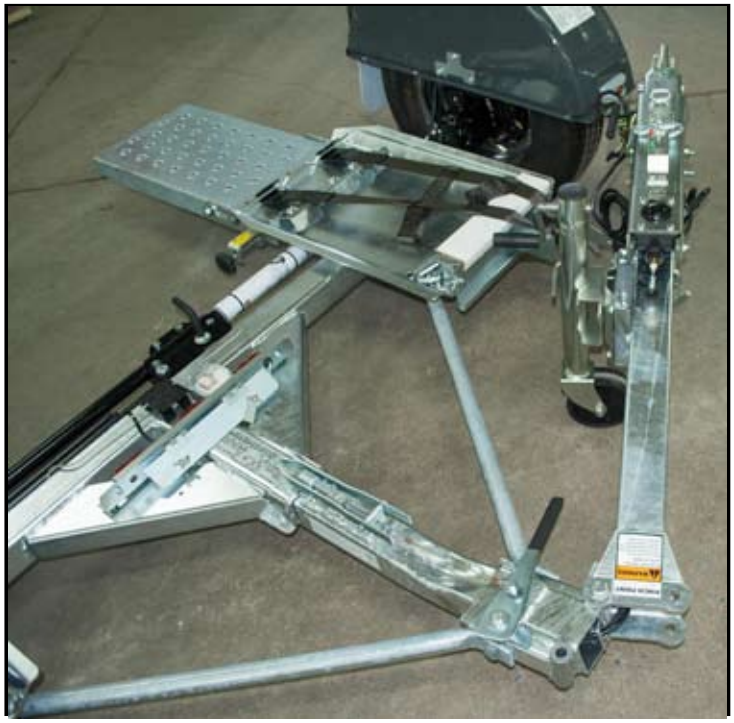

3. Push/pull tongue until it comes to a stop by the left fender. It is recommended to place lock pin and retainer clip back in tongue pivot for storage.

Folding Ramp Lock

NOTE:
Tow Dolly must be empty and unhooked to perform any and all of these steps. Do not attempt while tow dolly is loaded or hooked up.

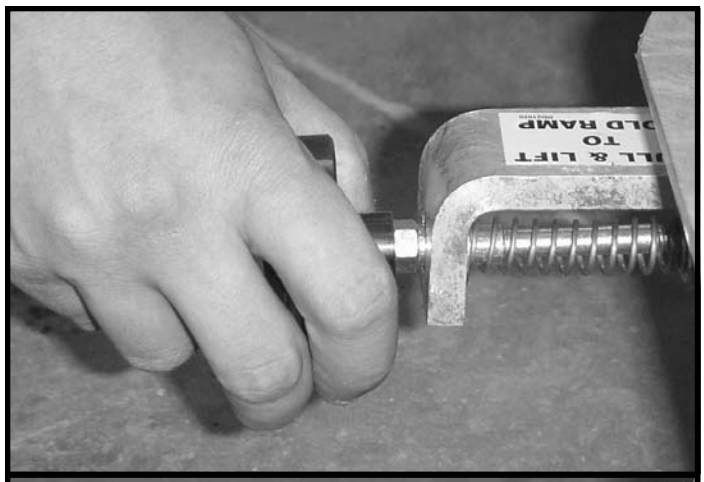

1. Locate ramp locks at inside center of ramps.

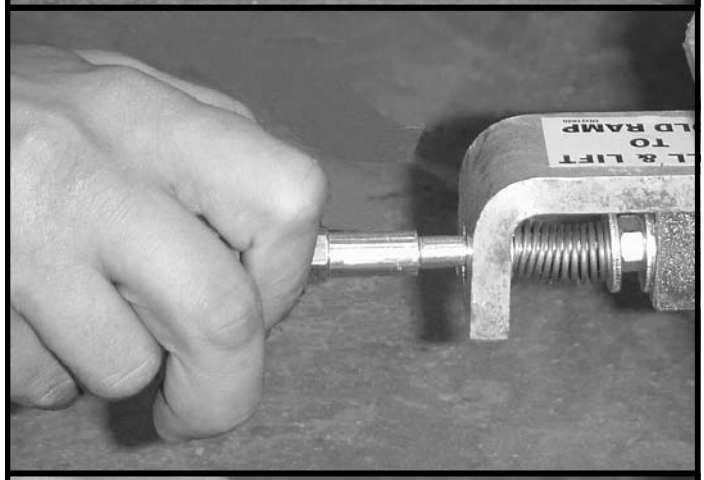

2. Pull ramp lock straight out as far as it will go.

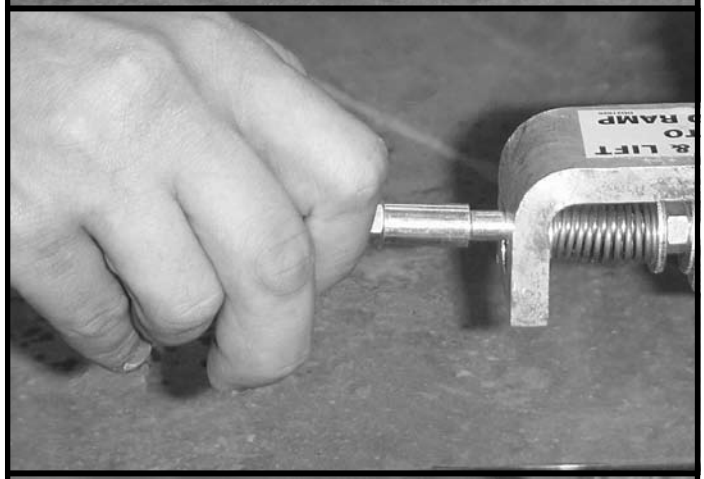

3. Lift ramp lock up as far as it will go and allow lock to slide in until it stops.

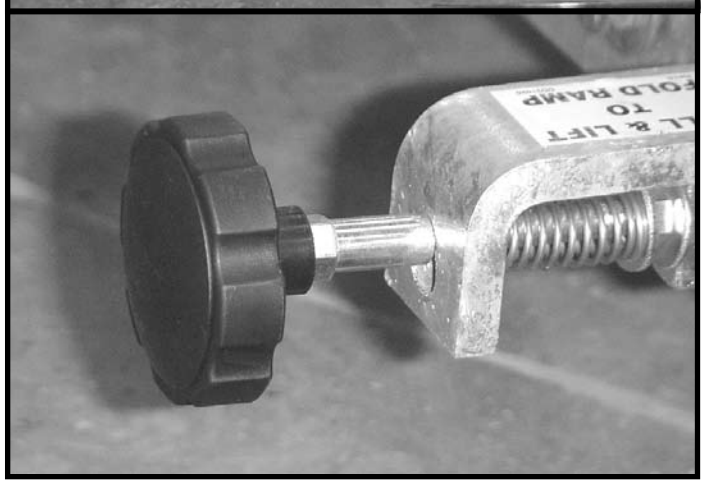

4. If lock has been pulled and lifted properly the ramp lock will extend out from it's holder. This will mean that the ramp is unlocked and ramp may be folded up.

Folding Ramp

NOTE:
Tow Dolly must be empty and unhooked to perform any and all of these steps. Do not attempt while tow dolly is loaded or hooked up.

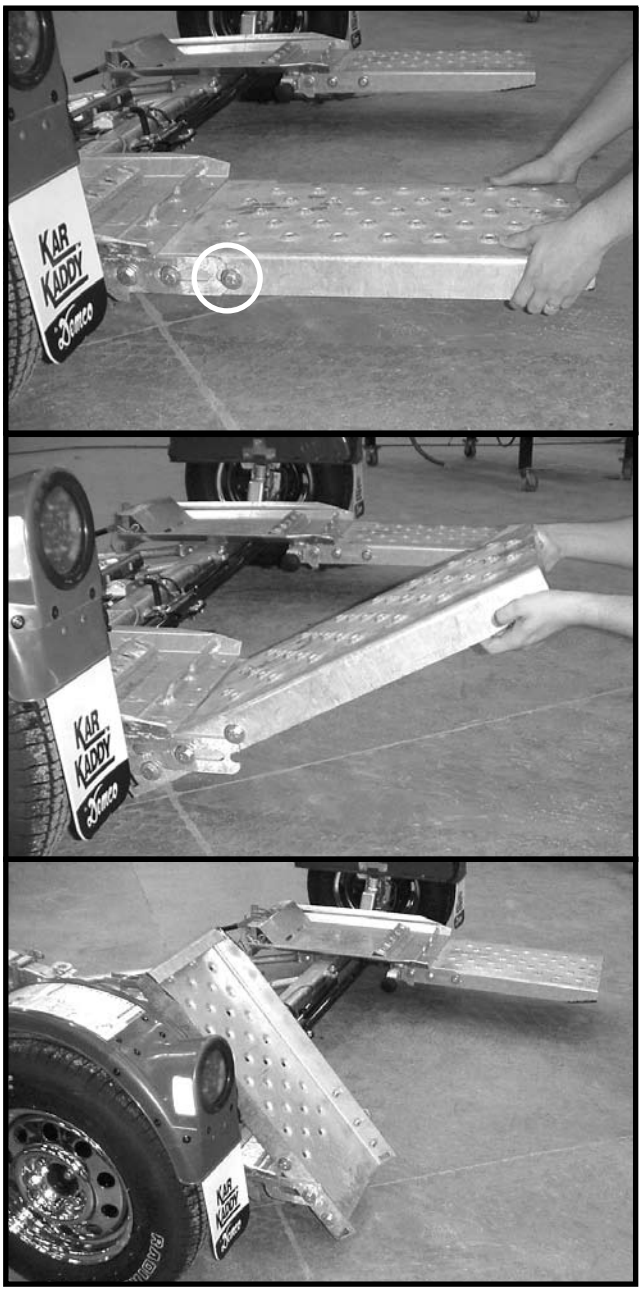

1. Pull ramp back as far as it will go. Bolt must be past notch before attempting the next step.

2. Lift ramp until it is past center and resting on it stops.

IMPORTANT:
When taking this tow dolly out of storage it is very important to check all pins and retainers for damage. If damage is found replace. Do not use damaged pins or retainers. Make sure that tongue pin and retainer clip is replaced after tongue is folded back to the forward and locked position. Fold ramps down as far as they will go and push forward until you hear or see retainer handles snap into their locked positions. Check to make sure they all fully seated. Make sure that all pins and locking devices are double checked before returning this unit to service.

Loading Angle Clearance Guide
Kar-Kaddy SS Loading Angle = 13.1°

IMPORTANT:
Using this guideline will reduce the chance of the towed vehicles air dam, or bottom of facia from interfering with tow dolly platform and/or tire stop. **"X"** must be less than 4.3 x **"Y"**.

Example: If **Y** measures 5"
4.3 x 5 = 21.5
X must measure less than 21.5"

NOTE: User's responsibility for checking clearance. If "Y" is less than 3.5", interference may occur.

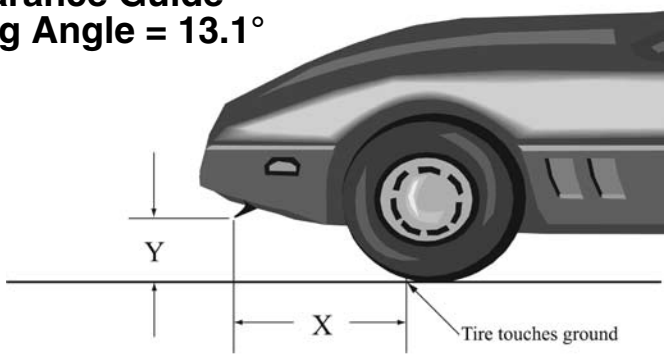

WARNING: FAILURE TO FOLLOW THESE INSTRUCTIONS CAN RESULT IN LOSS OF TOWING VEHICLE CONTROL, SEPARATION OF THE TOW DOLLY FROM THE TOWING VEHICLE, SEPARATION OF THE TOWED VEHICLE FROM THE TOW DOLLY, CAUSING SEVERE PERSONAL INJURY, DEATH, OR PROPERTY DAMAGE.

SAFETY

Safety is of utmost importance at all times. There are several items that must be checked each time before using and while using the Kar Kaddy.

Make sure all bolts are properly tightened and those requiring a set torque are up to specifications:

Tie Rod Castle Nut - 75 ft./lbs.

Lug Nuts - 120 ft./lbs.

Check Lug Nut tension after the first 5 miles and periodically thereafter.

The ball hitch must latch securely around the ball and the safety lock pin or lever must be in position to lock the hitch on the ball.

RECOMMENDED BALL HEIGHT: 18 inches to the top of the ball on the towing vehicle.

Hook the towed vehicle safety chains to the frame of the vehicle directly above the area where the chain is mounted on the Kar Kaddy. Leave some slack in the chain to allow suspension movement.

Check to make sure that all lights are in proper working order.

Examine the winches and straps, making sure they are in good condition.

Be certain the safety lock pins are locking the strap winches.

Retighten straps over the tires after the first 5 miles and every 50 miles thereafter. Ensure that they are tight.

The Kar-Kaddy tires must be inflated to the recommended 50 PSI.

The strap on the optional tongue winch must be in good condition and should be stored neatly on winch when not in use.

NOTE: The winch strap must not be left connected to the towed vehicle after it is loaded and strapped down.

Make sure the optional light bar is fastened securely at the rear of the towed vehicle.

The wires to the optional light bar should be run along the car and fastened so as not to damage the finish of the towed vehicle.

NOTE: This unit cannot be backed up, when loaded or with the steering lock pin removed.

All vehicles mounted on the Kar Kaddy must be mounted with the front of the vehicle facing forward.

Rear Wheel Drive: Disconnect the towed vehicle driveshaft for rear wheel drive vehicles with automatic transmission.

For manual transmission: Consult your vehicle owners manual for towing suitability with the drive shaft connected.

MAINTENANCE

Periodically check all bolts and nuts to insure proper tension or torque.

Grease the king pin and tie rod end grease zerks every 2500 miles.

An occasional drop of oil may be required on the moving parts of the tie down winches.

A light film of oil should periodically be applied to steering stabilizer arm to prevent rust.

NOTE: Proper toe-in is 1/32". This is preset at the factory.

The operator should periodically have the toe-in checked and adjusted if needed at a qualified alignment shop. Improper toe-in can result in irregular tire wear.

Wheel:

This tow dolly comes equipped with chrome wheels. To maintain a high gloss to the chrome, clean and wax with a soft cloth regularly. Do not use an abrasive to clean chrome, this will cause scratches and this will lead to rust.

IMPORTANT LOADING INSTRUCTION

Check your wheel tie-down straps.

Your Kar Kaddy is equipped with custom made wheel tie-down straps of a standard size that will fit most tires, however if your tires are too large or too small you will want to exchange these new straps for the proper size straps.

1. Tire too large - This is very obvious the strap will not basket over the tire properly, call us, we will provide at NO Charge on an exchange basis, the proper size strap. You must return your new unused straps and provide us with the Make and Model car and the tire size.

2. Tire too small - This is not as obvious, the basket will fit down over the tire very well, the problems cannot be readily seen. You must tighten the straps down solid and then check on the inside of the tire and be sure the strap, when tightened does not come in contact with any metal that may cause wear or cutting such as strut mounts. If there is contact, you need a smaller strap, call us, we will provide on a NO Charge, exchange basis, the proper size strap. You must return your new unused straps and provide us with the Make and Model car and tire size.

Thank you for Purchasing Demco Products.

LOADING INSTRUCTIONS

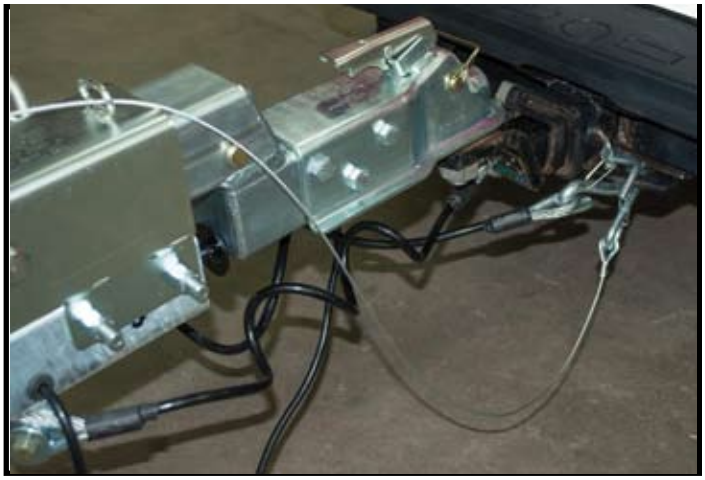

Step 1. Secure ball coupler to 2" (6,000 lb. capacity) towing vehicle ball only. Make sure that the hitch and the hitch ball are in good condition and not rusted, loose or stripped. **Recommended ball height is 18" to the top of the ball.** Make sure hitch is locked down. Criss-cross safety cables under tongue and secure to towing vehicle frame.

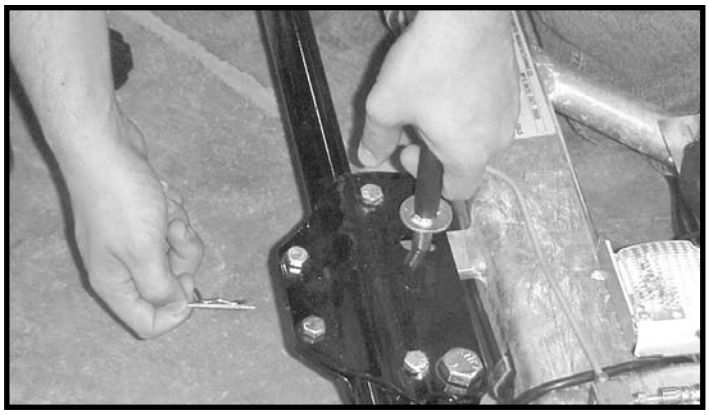

Step 2. Remove black locking pin **BEFORE** loading vehicle onto the Kar Kaddy. The removal of the locking pin allows "Auto Steer" to operate. When towing the dolly empty, this pin must be in place.

Step 3. Loosen wing nut on back of license plate holder, turn the clip on the front to a horizontal position and put license in the "down" position. Turn the clip back so it rests against the back of the light bar to hold the license down and tighten wing nut.

(License must be "UP" with the tow dolly empty).

Step 4. Before loading (and unloading) towed vehicle make sure platform and towed vehicle are in straight alignment. Tow dolly must be completely and properly hooked up to the towing vehicle. **Towing vehicle must be larger and at least 1000 lbs. heavier than the tow dolly and towed vehicle combined.**

IMPORTANT: Over all width of towed vehicle must not exceed:

76" max. (outside to outside),
42" min. (inside to inside),
76" max. (body width).

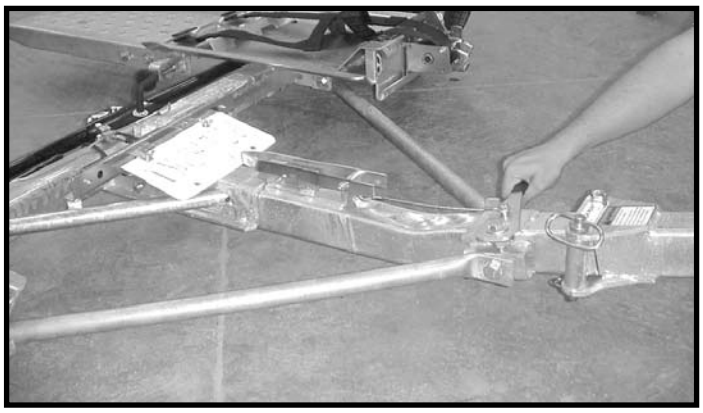

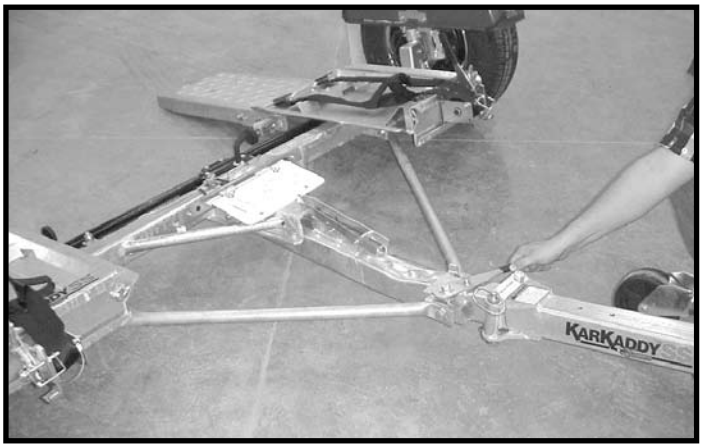

Step 5. Grasp bed release handle on tongue and pull toward coupler. This releases the tilt bed to permit loading.

Step 6. With someone safely guiding you, slowly drive vehicle onto platform **FRONT FORWARD.** (Any vehicle mounted on tow dolly must be mounted with front of the vehicle facing forward.) Drive the car forward until the tires touch the ramps. Make sure the tire is aligned to ascend onto the ramps.

Step 7. Drive vehicle onto the platform **- front forward -** until tires touch the wheel stops at the front of each side of the platform and the platform tilts to a flat position. Make sure the car is centered on the platform. Towed vehicle tires must fit in wheel troughs without overhanging sides. Engage towed vehicle parking brake. **Shift loaded car into "park" and lock steering wheel with front tires in a straight position. If the car does not have a locking steering column the steering wheel must be tied securely with front tires in a straight position.**

Rear Wheel Drive: Disconnect towed vehicle driveshaft for rear wheel drive vehicles with automatic transmission.
For manual transmission: Consult your vehicle owners manual for towing suitability with the drive shaft connected.

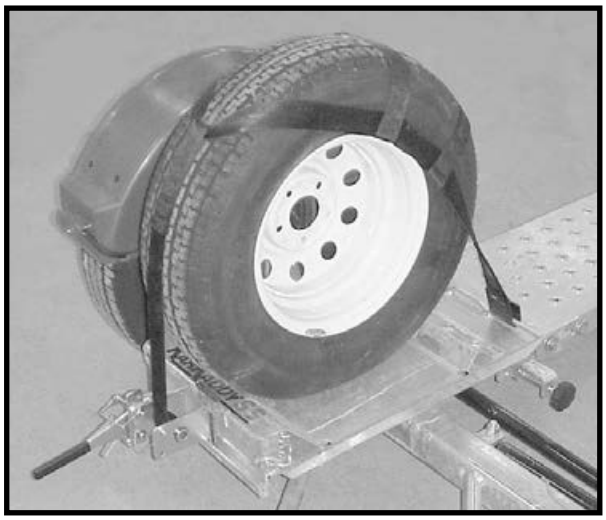

Step 8. Place one tie-down strap over each tire and secure hooks to rods located at the rear of each wheel platform. The short side of the hook must face the rear of the Kar Kaddy.

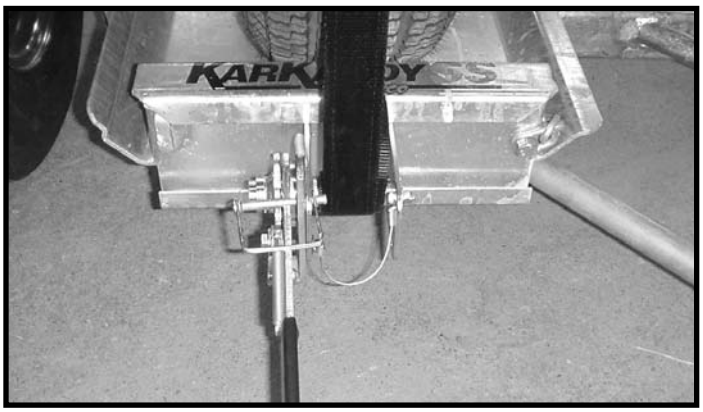

Step 9. Be sure tie-down winch is centered with the tire before tightening straps.

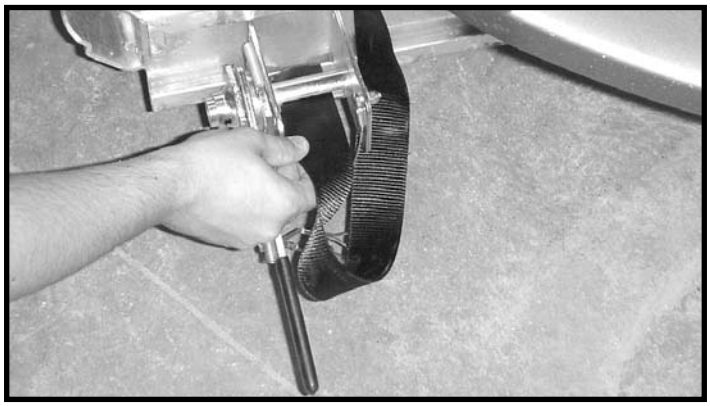

Step 10. Thread tie-down strap through the slotted tube on the tie-down winch. Pull approx. 6" of strap through this slot. Begin tightening strap making sure the tail becomes enclosed by the strap coming over the tire. Tighten the straps ensuring that the strap fed through the slot binds between the shaft and the strap being wound onto the winch shaft. While tightening straps, pull cross strap forward to ensure even tightening. **NOTE: Be sure to tighten straps until each tire starts to flatten against tire stop.** After each strap is tight, insert a safety pin in each winch.

Step 11. Make sure the tie-down strap is the correct size for the auto tire. See page 4 of this instruction for proper fit and exchange instructions.

Step 12. Hook the towed vehicle safety chains to frame of vehicle directly above the area where the chains are mounted on the Kar Kaddy. Leave some slack in the chains to allow suspension movement of the towed vehicle. **Disengage towed vehicle parking brake.**

Straps must be retightened after first 5 miles of travel. Check straps every 50 miles thereafter to ensure they are tight and not rubbing or fraying.

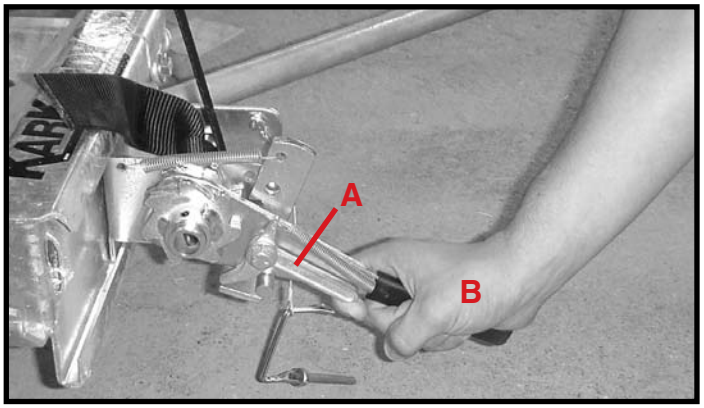

Step 13. TO UNLOAD towed vehicle. **Never unhook tow dolly coupler from towing vehicle, before unloading tow dolly.** Make sure that platform and vehicle are straight. Re-install driveshaft. Ensure that towed vehicle parking brake is fully engaged, then unhook the towed vehicle safety chains, and release the tie-down straps. **NOTE:** Tie down straps must be "quick -released" by grasping ratchet pawl **(A)** and ratchet handle **(B)** simultaneously and pushing down sharply. This process will permit easy removal of strap from winch. Grasp bed release handle on tongue and pull toward coupler. This releases the tilt bed to permit unloading. This will allow the platform to tilt as you slowly drive off. Make sure the winch ratchet handles are horizontal. Replace the "Auto Steer" locking pin (for towing empty).

Step 14. To pull the Kar Kaddy empty, make sure "Auto-Steer" LOCKING PIN IS IN PLACE and towing vehicle safety chains are up and hooked. Tie-down winch handles should be left in a down position (horizontal position) with safety pins in place when towing loaded or empty. **DO NOT ATTEMPT TO PULL KAR KADDY WITH WHEEL PLATFORM IN LOADING (tilted) POSITION**.

DAMAGE PREVENTION

Check your vehicle manual or registration for vehicle weight. Towing vehicle must be larger and at least 1,000 lbs. heavier than the towed vehicle and tow dolly combined.

Do not pack goods in car that is being towed. Overloading the Kar Kaddy or exceeding the width limit may result in damage to both car and Kar Kaddy.

REAR WHEEL DRIVE PRECAUTIONS

Disconnect towed vehicle driveshaft for rear wheel drive vehicles with automatic transmission. Simply placing transmission in neutral is not sufficient to prevent damage to transmission.

For manual transmission: Consult your vehicle owners manual for towing suitability with the drive shaft connected.

ALL VEHICLES MOUNTED ONTHE KAR KADDY MUST BE WITH THE FRONT OF THE VEHICLE FACING FORWARD.

⚠ SAFETY

- Examine winches and straps to make sure they are in good condition.
- Check wheel nuts every trip.
- Tires must be inflated to recommended pressure by tire manufacturer.
- Be certain the safety lock pins lock the strap winches.
- Retighten the straps over the tires after the first 5 miles of travel. Check straps every 50 miles there after to ensure they are tight and not rubbing or fraying.

KAR-KADDY TOE-IN ADJUSTMENT

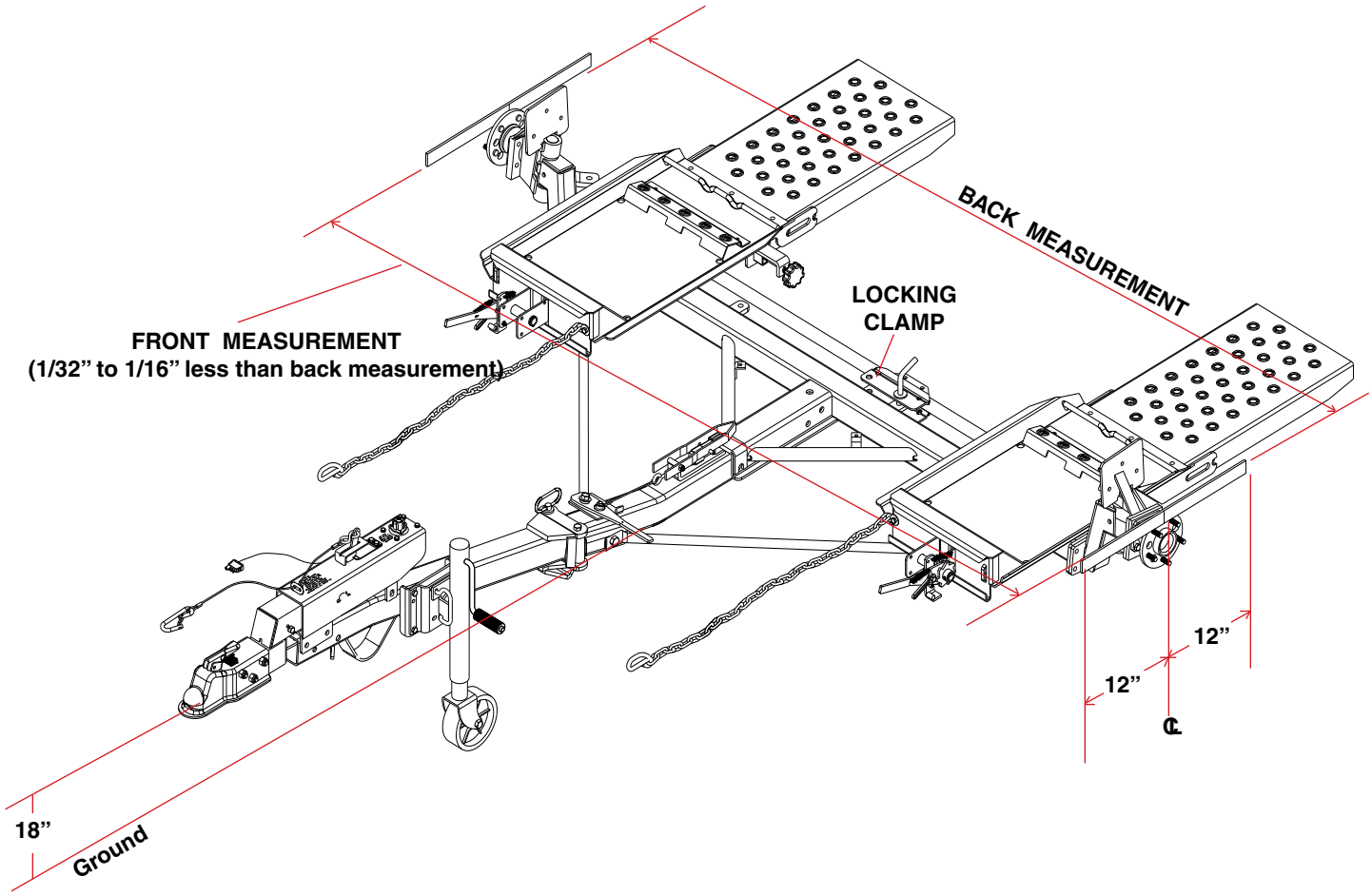

MEASURING THE TOE-IN

Have the tongue in a "hooked-up" position with the ball coupler 18" off the ground. Jack up the axle just enough to allow you to take the wheels off and put blocks under the axle. Take the wheels off.

Find two 24" long bars. These could be a level, a square or a straight piece of iron bar. Clamp one bar tight to the face of each hub/Brake Drum with 12" extending forward and backward of the center of the spindle. The bars must be parallel to the platform the car sits on. Measure across the back end of the bars and then across the front end. The front measurement should be 1/32" to 1/16" less than the back measurement. If the unit needs to be adjusted, this must be done by adjusting the tie rod.

TOE-IN ADJUSTMENT

1. Put a mark on each side of the locking clamp on the tie rod.
2. Loosen the locking nuts on each end of the tie rod and then the four bolts on the tie rod locking clamp.
3. Turn the tie rod whichever direction is needed until you have a front measurement of 1/32" to 1/16" less than the back measurement.
4. Hold the tie rod and tighten the locknuts on each end.
5. Measure again to make sure the toe-in measurement has not moved.
6. Tighten the locking clamp bolts while holding clamp between the marks you previously put on the tie rod.
7. Reassemble the rest of the Kar Kaddy unit.

KK460SS PARTS BREAKDOWN

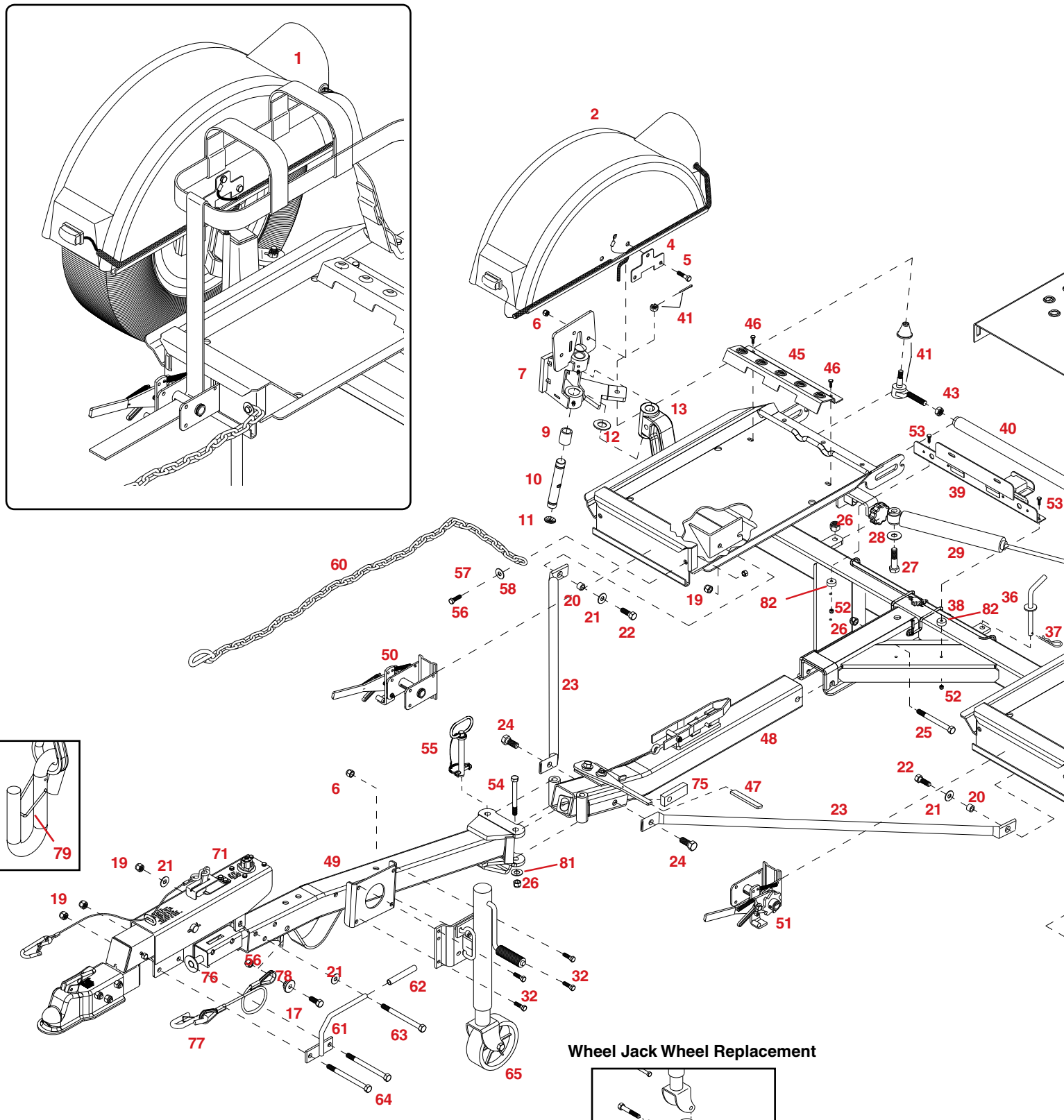

Wheel Jack Wheel Replacement

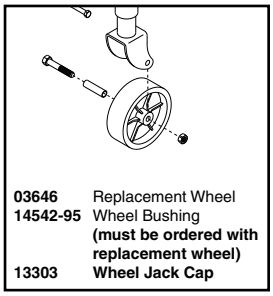

03646	Replacement Wheel
14542-95	Wheel Bushing **(must be ordered with replacement wheel)**
13303	**Wheel Jack Cap**

REF. NO.	PART NO.	QTY.	DESCRIPTION
1.	**03528**	2	Tie-down Strap assembly, Black
2.	**5983**	1	Right Large Fender Assembly with Lights
3.	**5982**	1	Left Large Fender Assembly with Lights
4.	**04424-95**	2	Fender Backing Plate
5.	**00914**	6	3/8”-16UNC x 1-1/2” Hex Head Bolt (gr.5)
6.	**02592**	18	3/8”-16UNC Nylon Lock Nut
7.	**12560-81**	1	Right Wheel Carrier
8.	**12559-81**	1	Left Wheel Carrier
9.	**01732**	4	1”I.D. x 1-1/4”O.D. x 1-1/2”lg. Bushing (brnz)
10.	**11588**	2	King Pin (1” x 6-1/2”)
11.	**01731**	4	1-1/4” Dust Cap
12.	**01978**	2	1” I.D.x 18 GA Narrow Rim Machine Washer

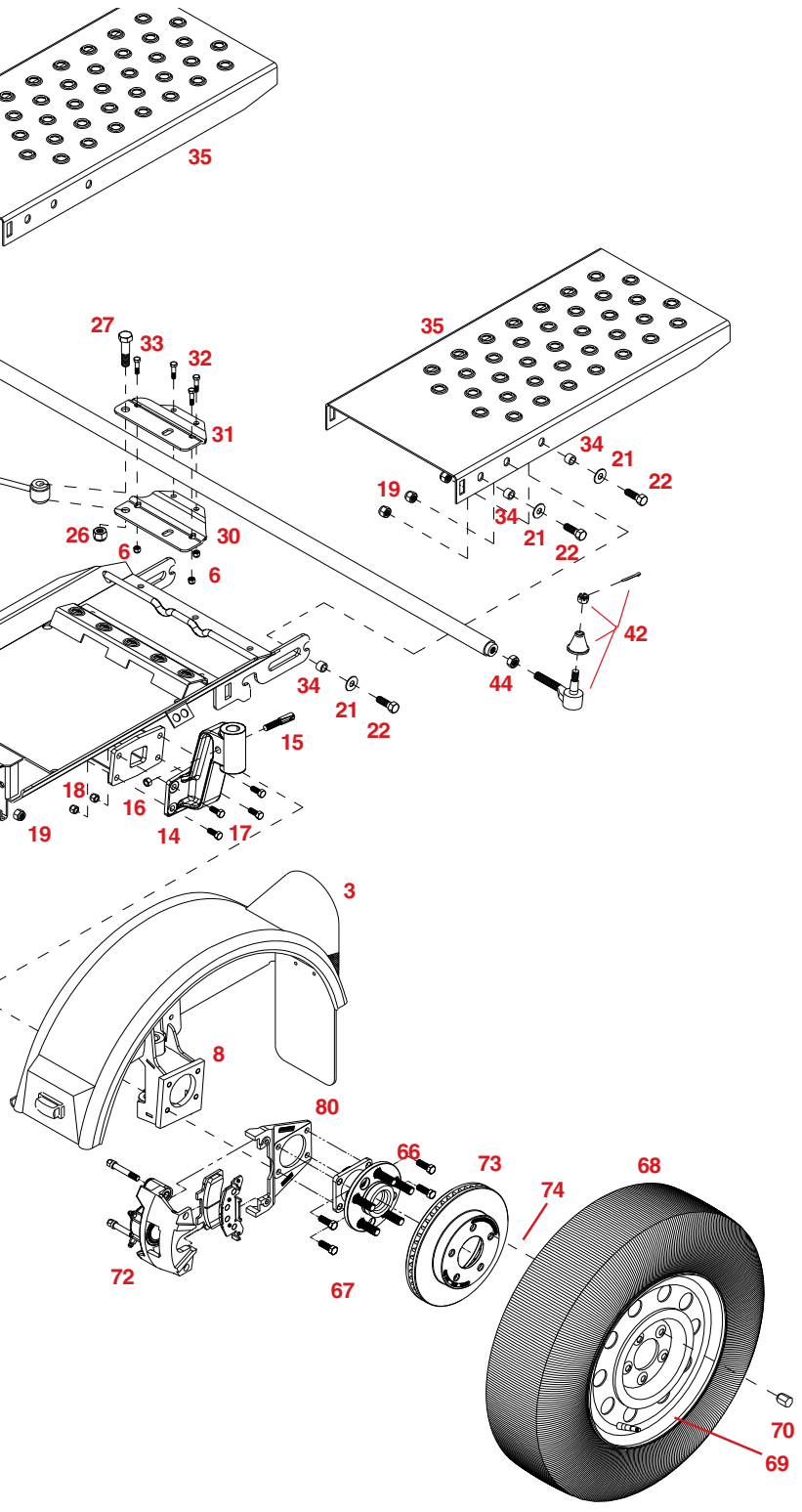

REF. NO.	PART NO.	QTY.	DESCRIPTION
13.	**35652-81**	1	Right Drop Axle & Wheel Carrier Assembly
14.	**35651-81**	1	Left Drop Axle& wheel Carrier Assembly
15.	**11551**	2	King Pin Retainer Bolt
16.	**03724**	2	7/16”-20UNF Center Punched Nut
17.	**02377**	10	7/16”-20UNF x 1-1/2” Epoxy Bolt (gr.8)
18.	**04168**	8	7/16”-20UNF Nylon Lock Nut
19.	**02178**	18	1/2”-13UNC Nylon Lock Nut
20.	**02579-95**	2	Pivot Bushing
21.	**00085**	15	1/2” Flatwasher
22.	**01254**	15	1/2”-13UNC x 1-1/2” Hex Head Bolt (gr.5)
23.	**02747-96**	2	Bracing Strut
24.	**03503**	2	5/8”-11UNC x 1-1/4” Epoxy Bolt (gr.5)
25.	**02434**	1	5/8”-13UNC x 4-1/2” Hex Head Bolt (gr.5)
26.	**02587**	4	5/8”-13UNC Nylon Lock Nut
27.	**02696**	2	5/8”-11UNC x 2-3/4” lg. Hex Head Bolt (gr.5)
28.	**14100**	1	5/8” Flatwasher
29.	**01729-30**	1	Steering Stabilizer Shock
30.	**11553-80**	1	Tie Rod Clamp, Bottom
31.	**11554-80**	1	Tie Rod Clamp, Top
32.	**00907**	6	3/8”-16UNC x 1” Hex Head Bolt (gr.5)
33.	**02494**	2	3/8”-16UNC x 2-1/4” Hex Head Bolt (gr.5)
34.	**11659-91**	12	Ramp Bushing
35.	**11529-96**	2	Ramp
36.	**01718-95**	1	Tie Rod Locking Pin
-	**02189**	1	Replacement Black Handle Grip for Locking Pin
37.	**00182**	1	Hair pin
38.	**11540-96**	1	KK460SS Main Frame
39.	**5740**	1	License Plate Bracket Assembly
40.	**5553-81**	1	Tie Rod Assembly w/ ends
41.	**5179A**	1	Right Tie Rod End w\Right Hand Threads & Jam Nut
42.	**5178A**	1	Left Side Tie Rod End w\ Left Hand Threads & Jam Nut
43.	**01905**	1	9/16”-18UNF Jam Nut w/Right Hand Threads
44.	**01904**	1	9/16”-18UNF Jam Nut w/Left Hand Threads
45.	**04773-96**	2	Rear tire Stop
46.	**00523**	4	3/8”-16UNC x 1-1/4” lg. Hex Head Bolt (gr.5)
47.	**02243**	1	Black Vinyl Hand Grip
48.	**11978-96**	1	Rear Tongue Half
49.	**11969-96**	1	Front Tongue Half
50.	**5433**	1	Right Winch assembly
51.	**5432**	1	Left Winch Assembly
52.	**02772**	2	1/4”-20UNC Nylon Lock Nut
53.	**04177**	2	1/4”-20UNC x 1” Carriage Bolt
54.	**11967-95**	1	5/8”-13UNC x 5 1/4” Hex Head Bolt (gr.5) Hinge Bolt
55.	**11795**	1	Pin, 5/8” x 4-7/8”
56.	**02209**	2	7/16” Hex Nut (Gr.8)
58.	**00059**	8	3/8” Flat Washer
59.	**02771**	2	7/16”-14UNC Nylon Lock Nut
60.	**02383**	2	36” Safety Chain
61.	**04017-95**	1	Bolt on Handle
62.	**02189**	1	Rubber Handle Grip
63.	**01338**	1	1/2”-12UNC x 4-1/2” lg. Hex Head Bolt (gr.5)
64.	**01975**	2	1/2”-12UNC x 5” lg. Hex Head Bolt (gr.5)
65.	**11683**	1	Wheel Jack
-	**13303**	-	Plastic Cap for Wheel Jack
66.	**04369**	2	Hub and Spindle
-	**02917**	-	Replacement 12mm x 1.50mm Stud Bolt
67.	**02210**	8	7/16”-20UNF x 1-1/4” Epoxy Bolt (gr.8)
68.	**13989**	2	ST205/75R14 “C”Range Radial Tire
69.	**11574**	2	Chrome Rim, 14 x 5.5, 5 on 115mm B.C.
70.	**02933**	10	Chrome Lug Nut
71.	**8669113**	1	DA91 Actuator
72.	**13825-92**	2	Disc Brake Caliper Assembly
73.	**03927-92**	2	10” Brake Rotor
74.	**04174**	4	Retainer Washer
75.	**11971-95**	2	Nut Plate
76.	**12445-30**	1	Spring Return System
77.	**12238**	2	Safety Cable 36”
78.	**12229-95**	2	Safety Cable Mounting Washer
79.	**12253**	-	Safety Hook Spring Clip Replacement
80.	**13920-92**	2	Caliper Mount
81.	**00496**	1	5/8” Machine Washer NR
82.	**04462**	2	Urethane Snubbers

MODEL DA91 ACTUATOR PARTS BREAKDOWN

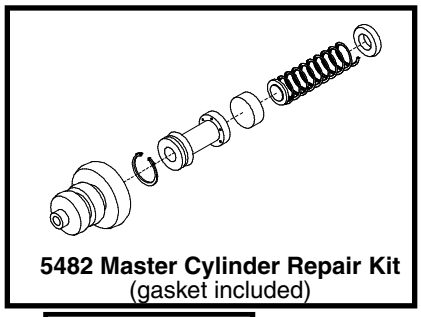

5482 Master Cylinder Repair Kit
(gasket included)

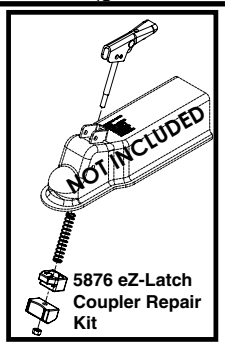

5876 eZ-Latch Coupler Repair Kit

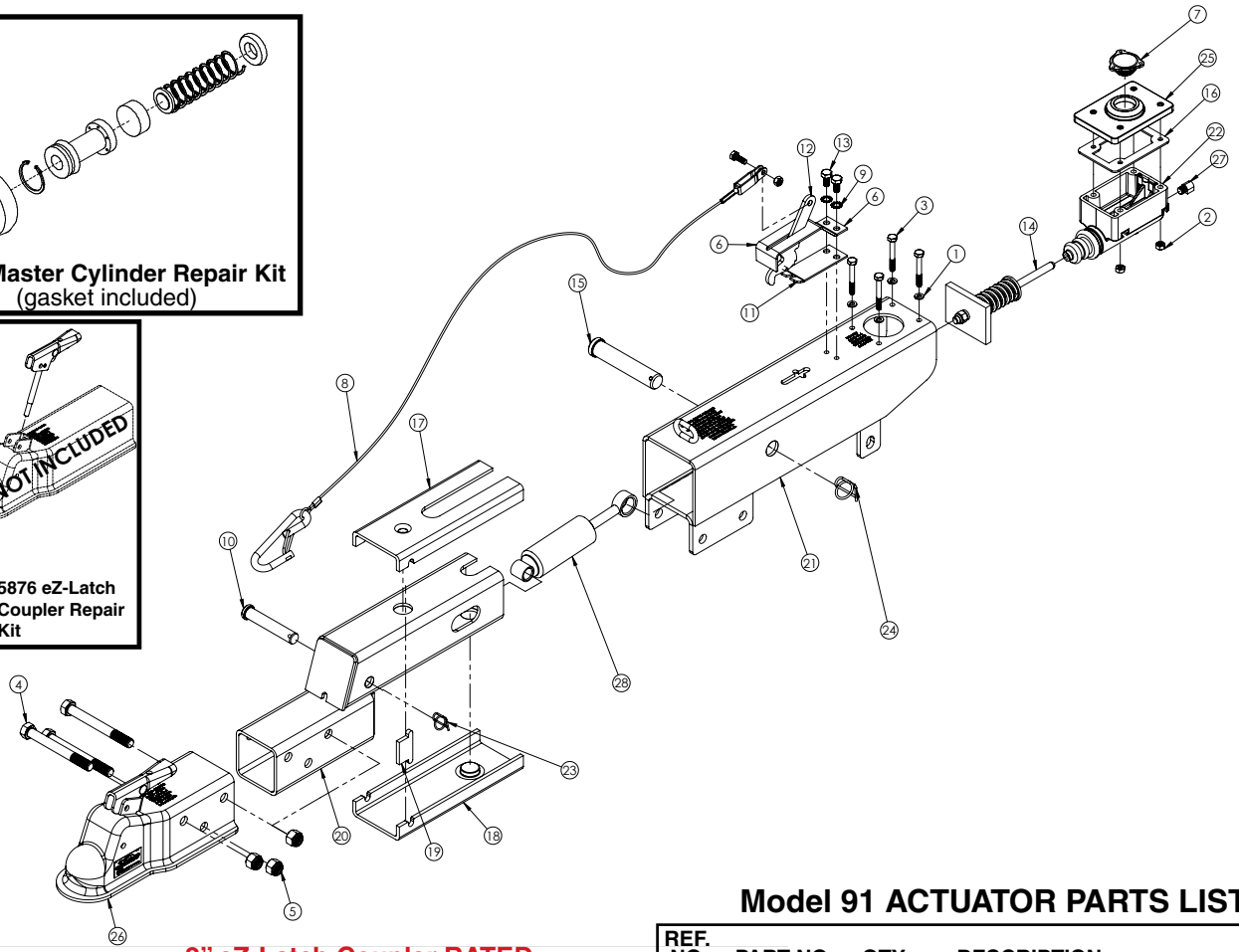

2" eZ-Latch Coupler RATED AT 10000#

BLEEDING THE SYSTEM

The first requirement for safe, sure hydraulic braking is the use of quality brake fluid. Use only DOT-3 or DOT-4 brake fluid from a sealed container.

If pressure bleeding equipment is available, follow the manufacturer's instruction in bleeding the system.

If system must be bled manually, proceed as follows: Fill master cylinder with fluid. Install bleeder hose on top bleeder of first caliper to be bled.

NOTE: always bleed brakes by using the top bleed screw on the caliper.

Have loose end of hose submerged in brake fluid in glass container to observe bubbling.

By loosening the top bleeder screw located on the caliper one turn, the system is open to the atmosphere through the passage drilled in the screw. Pump actuator with long steady strokes. The bleeding operation is completed when bubbles no longer rise to the surface of the fluid. **Be sure to close bleeder screw securely.**

Repeat bleeding operation at each caliper. During the bleeding process, replenish the brake fluid, so the level does not fall below the 1/2 full level in the master cylinder reservoir. After bleeding is complete, make sure master cylinder reservoir is filled and filler cap is securely in place.

After the bleeding operation has been completed, apply pressure to the system and check the whole brake system for leaks.

Model 91 ACTUATOR PARTS LIST

REF. NO.	PART NO.	QTY.	DESCRIPTION
1.	**00057**	4	1/4" Lockwasher
2.	**00062**	4	1/4"-20UNC Hex Nut
3.	**00618**	4	1/4"-20UNC x 2" Hex Head Bolt (Gr.5)
4.	**01338**	3	1/2" NC x 4-1/2" Hex Head Bolt (Gr.5)
5.	**02178**	3	1/2" -13 UNC Nylon Insert Lock Nut
6.	**03866-95****	1	Lever Guide
7.	**03876**	1	Master Cylinder Cap w/Diaphragm & O-ring
8.	**05408****	1	Safety Cable
9.	**05424**	2	5/16" External Tooth Lockwasher
10.	**05426**	1	Front Shock Pin f/Drop Tube Actuators
11.	**05693-95****	1	Emergency Lever Spring
12.	**05951****	1	Emergency Lever Assembly
13.	**05961**	2	5/16" -18UNC x 5/8" Hex Head Bolt (Gr.5)
14.	**05977**	1	Push Rod Assembly
15.	**05986-95**	1	Connecting Pin
16.	**09153**	1	Plastic Master Cylinder Gasket ONLY
17.	**10965**	1	Upper Slider
18.	**10966**	1	Lower Slider
19.	**10967**	2	Side Spacers
20.	**11079-95**	1	Drop Tube Actuator Slider
21.	**11164-95**	1	3 Bolt Mount Outer Case
22.	**11190**	1	Master Cylinder
23.	**12396**	1	Rue Ring Lock Cotter 5/8" Shaft
24.	**12397**	1	Rue Ring Lock Cotter 7/8" Shaft
25.	**12557**	1	Master Cylinder Cap
26.	**12925**	1	10000# 2" eZ-Latch Coupler
27.	**14798**	1	90° Elbow Fitting
28.	**SB12426**	1	Damper/Shock

-	**8669113**	-	DA91 Actuator w/ 2" eZ-Latch Coupler
-	**5401**	-	Lever Replacement Kit (incl. items w/**)
-	**5482**	-	Master Cyl. Replacement Kit (disc)
-	**5876**	-	eZ-Latch Coupler Repair Kit

Please order replacement parts by **PART NO.** and **DESCRIPTION**

DISC BRAKE PARTS BREAKDOWN AND PARTS LIST

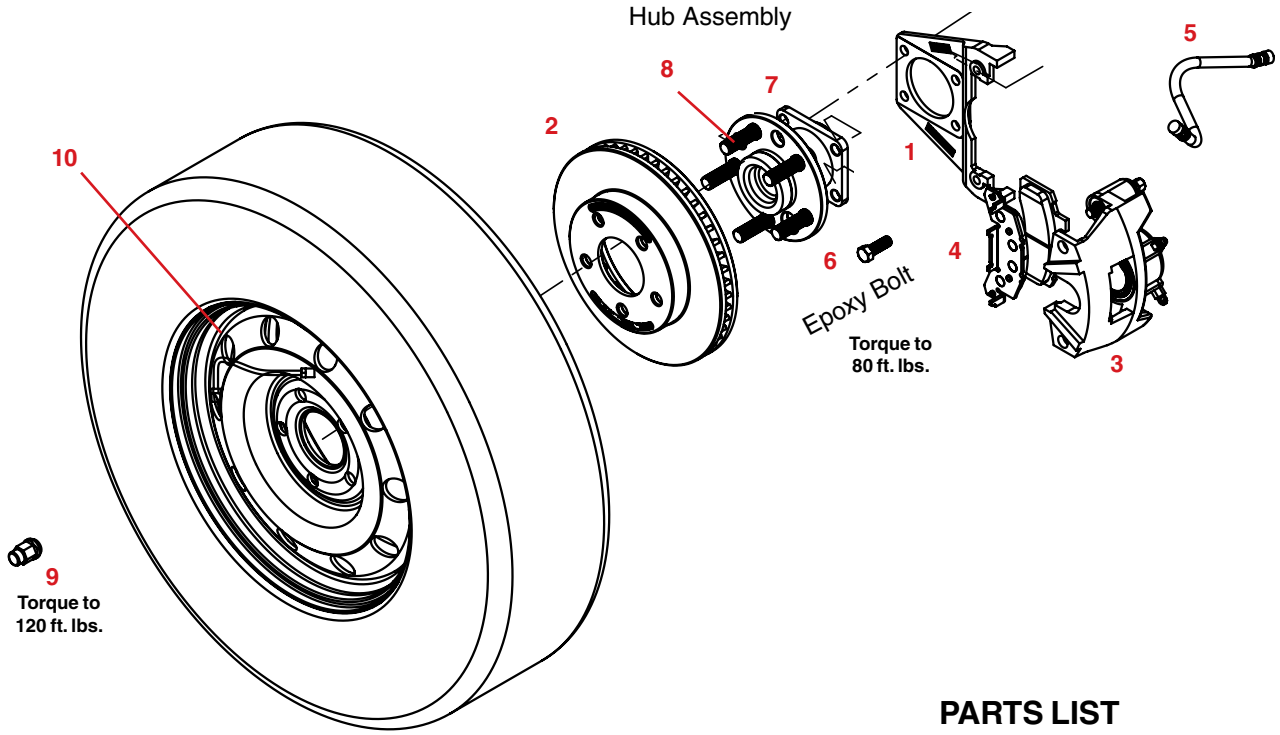

ASSEMBLY

1. Begin by mounting the Hub Assembly and the Caliper Mounting Bracket (#1) to the Forged Arm using the (#6) 7/16" Epoxied Bolts (as shown).
2. Now place the Rotor (#2) onto the Hub Assembly as shown in the diagram.
3. Make sure the Brake Pads (#4) are correctly placed in the Caliper (#3).
4. Place Caliper (#3) over the Rotor (#2), and secure it to the Mounting Bracket (#1) using the Caliper Mounting Bolts (not shown).
5. When mounting left caliper only, rotate elbow fitting 1/4 turn tighter (clockwise) to position elbow fitting correctly. Hook up Brake Hoses (#5) and replace the Rim and Tire.

PARTS LIST

REF. NO.	PART NO.	QTY.	DESCRIPTION
1.	**13920-92**	2	Caliper Mounting Plate
2.	**03927-92**	2	Rotor
3.	**13825-92**	2	Disc Brake Caliper Complete
4.	**13824**	1	Brake Pads (for one complete axle)
5.	**05982**	2	19" Brake Hose
6.	**02377**	8	7/16"-20UNF Gr8 x 1-1/2" Epoxy Hex Hd Bolt
7.	**04369**	2	Hub (5 on 115mm Bolt Circle)
8.	**02917**	-	12mm x 1-1/2" Replacement Stud Bolt
9.	**02933**	-	12mm Lug Nut Chrome
10.	**11574**	2	14x5.5" Chrome Rim (115mm Bolt Circle)
-	**5968**	2	Rim and Tire Assembly
-	**14179**	-	Kit Disc Brake Fitting (includes items listed below)
-	**14798**	1	90° Elbow Fitting (not shown)
-	-	2	Bleeder Valve
-	-	2	Rubber Bushing
-	-	2	Stainless Steel Bushing
-	-	2	Stainless Steel Bolt

Please order replacement parts by **PART NO.** and **DESCRIPTION.**

SURGE BRAKES PARTS BREAKDOWN

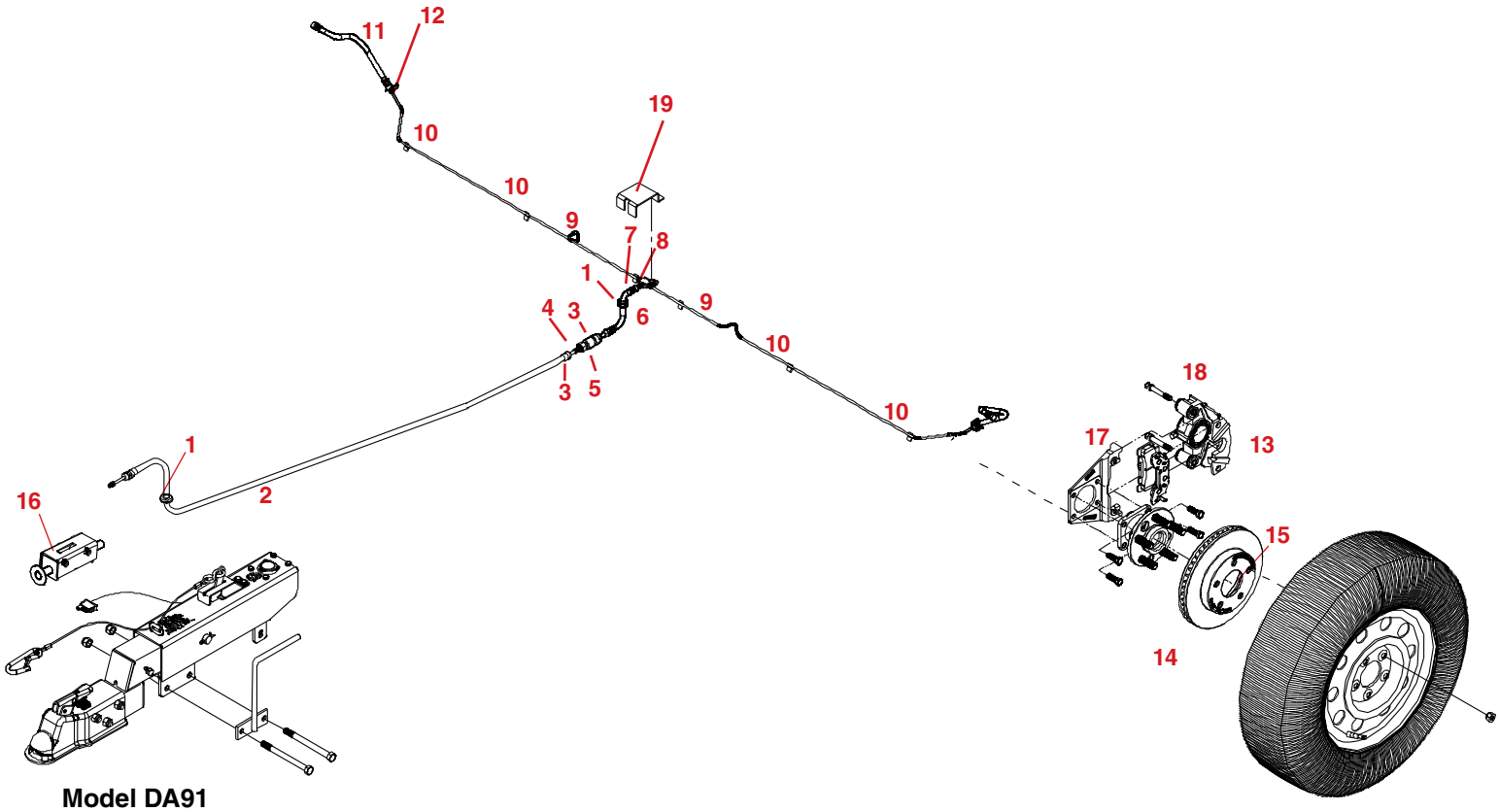

Model DA91
Brake Actuator

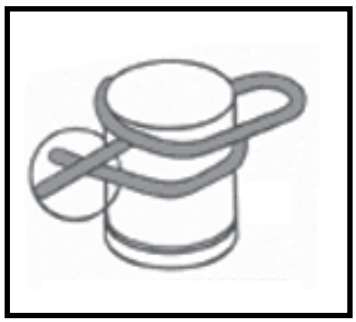

When servicing actuator and installing Rue Pins, make sure to manual lock the Rue Pin as shown above.

SURGE BRAKES PARTS LIST

REF. NO.	PART NO.	QTY.	DESCRIPTION
1.	**13047**	2	Rubber Grommet
2.	**12508**	1	63" Brake Hose
3.	**05679**	2	Brake Fitting
4.	**11617**	1	Male Coupler
5.	**11618**	1	Female Coupler
6.	**11643**	1	7" Brake Hose Swivel Male/Solid Male
7.	**SB7785**	1	Brake Line Tee
8.	**02196**	1	5/16" x 3/4" Self-threading Bolt
9.	**SB541**	2	41" Brake Line
10.	**02549**	6	Rubber Protector
11.	**05982**	2	19" Brake Hose
12.	**SB7764**	2	Brake Line Clip
13.	**13825-92**	1	Disc Brake Caliper Assembly
14.	**03927-92**	2	10" Brake Rotor
15.	**04174**	4	12mm Retainer Washer (2 per disc)
16.	**12445-30**	1	Spring Return System
17.	**13920-92**	2	Caliper Mount
18.	**14486**	4	Caliper Mounting Bolt SS
19.	**15471-76**	1	Brake Tee Cover

Please order replacement parts by PART NO. and DESCRIPTION.

BLEEDING THE SYSTEM

The first requirement for safe, sure hydraulic braking is the use of quality brake fluid. Use only DOT-3 or DOT-4 brake fluid from a sealed container.

Only use pressure bleeding equipment and follow the manufacturer's instruction in bleeding the system.

See page 22 for complete bleeding instructions.

Spring Return System

Slide spring return system (#16) into tongue tube, secure the actuator and lift handle to the front end of the tongue with two 1/2" x 5-1/2" gr.5 bolts, one 1/2" x 4-1/2" gr.5 bolt, and locknuts.

NOTE: The spring return system has a small nut wedged in the spring area for pre-load installation. **Do not** remove nut. Nut will automatically drop out during first braking period.

WINCH ASSEMBLY

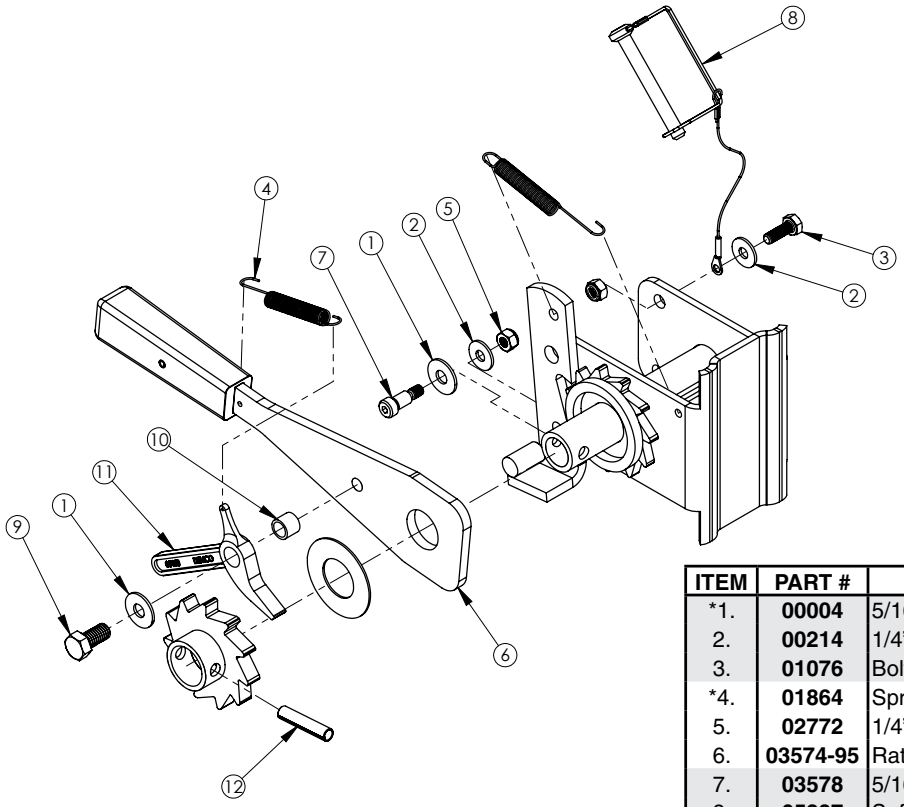

Left Winch 5432 (Shown)
Right Winch 5433

ITEM	PART #	DESCRIPTION	QTY.
*1.	**00004**	5/16” Flat Washer	2
2.	**00214**	1/4” Flat Washer	2
3.	**01076**	Bolt 1/4” - 20UNC x 3/4” Hex Head	1
*4.	**01864**	Spring	2
5.	**02772**	1/4” - 20UNC Nylon Insert Locknut	2
6.	**03574-95**	Ratchet Handle Plated w/ Hand Grip	1
7.	**03578**	5/16” - 18UNC x 1/2” Socket Head Shoulder Bolt	1
8.	**05337**	Safety Pin w/Cable	1
*9.	**05444**	3/8” - 16UNC x 3/4” Hex Head Bolt w/ Epoxy	1
*10.	**05449**	Winch Pawl Bushing (Stainless Steel)	1
*11.	**05450**	Winch Pawl	1
12.	**11750**	Roll Pin 5/16” x 1-1/2”	1
-	**5227**	Replacement Winch Pawl Kit (includes 1 of * items	-

Please order replacement parts by PART NO. and DESCRIPTION.

TILT-BED LATCH ASSEMBLY

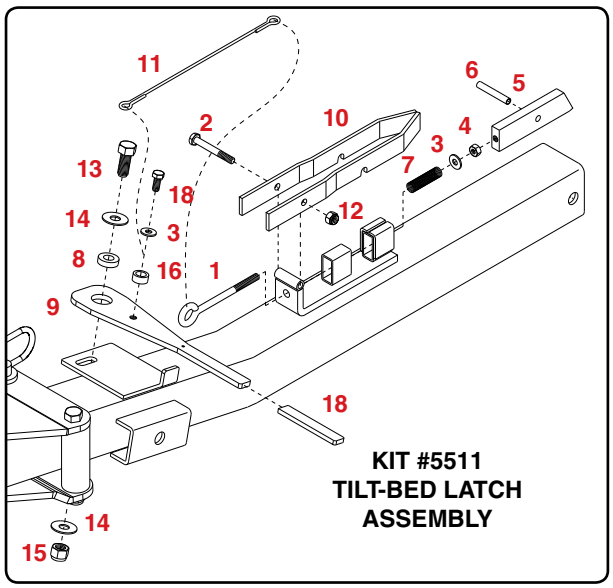

KIT #5511
TILT-BED LATCH
ASSEMBLY

REF. NO.	PART NO.	QTY.	DESCRIPTION
	5511	-	**Tilt-Bed Latch Kit**
1*.	**03434**	1	5/16”-18 UNC x 4” Eye Bolt
2*.	**04221**	1	5/16”-18 UNC x 2-1/2 Hex Head Bolt (Gr 5)
3*.	**00004**	2	5/16” Flatwasher
4*.	**00007**	1	5/16”-18 UNC Hex Nut
5*.	**03379-95**	1	Latch Block
6*.	**03435**	1	Roll Pin (5/16” x 2-1/4”)
7*.	**03499**	1	Latch Spring - Stainless Steel
8.	**03382-95**	1	Latch Handle Pivot Bushing
9.	**03574-95**	1	Latch Handle
10.	**03381-95**	1	Latch Catch
11.	**03433**	1	Latch Cable
12.	**02802**	1	5/16-18 UNC Nylon Insert Locknut
13.	**00967**	1	1/2”-13UNC x 1-1/4” lg. Hex Head Bolt (gr.5)
14.	**00085**	2	1/2” Flatwasher
15.	**02178**	1	1/2”-13UNC Nylon Insert Locknut
16.	**05449**	1	Spacer Bushing - Stainless Steel
17.	**05444**	1	3/8”-16 UNC x 3/4” Epoxied Hex Bolt (Gr 5)
18.	**02243**	1	Black Vinyl Hand Grip

Please order replacement parts by PART NO. and DESCRIPTION.

*** Items included in 5511 kit**

RAMP LATCH ASSEMBLY

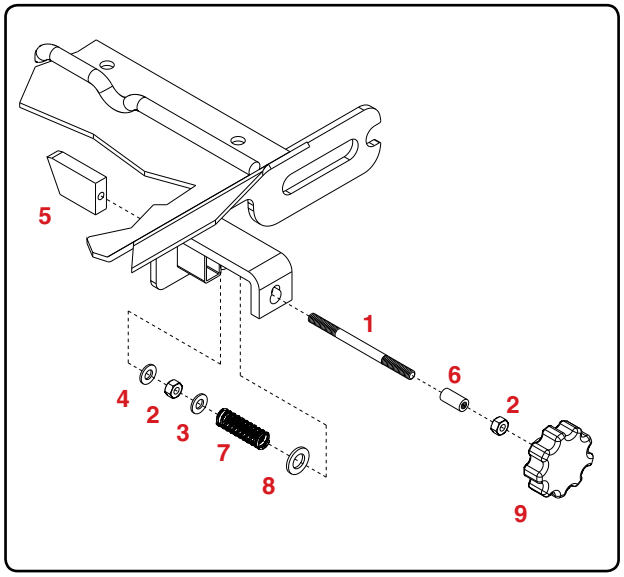

REF. NO.	PART NO.	QTY.	DESCRIPTION
	5763	**-**	**Ramp Latch Kit**
1.	**11622-95**	1	5/16”-18 UNC Latch Rod
2.	**00007**	2	5/16”-18 UNC Hex Nut
3.	**00004**	1	5/16” Flatwasher
4.	**00059**	1	3/8” Flatwasher
5.	**11570-95**	1	Latch Block
6.	**11623-95**	1	Threaded Bushing
7.	**03499**	1	Latch Spring - Stainless Steel
8.	**02384**	1	1/2” Narrow Machine Washer
9.	**11621**	1	Handle/Knob

Please order replacement parts by PART NO. and DESCRIPTION.

LICENSE PLATE BRACKET ASSEMBLY

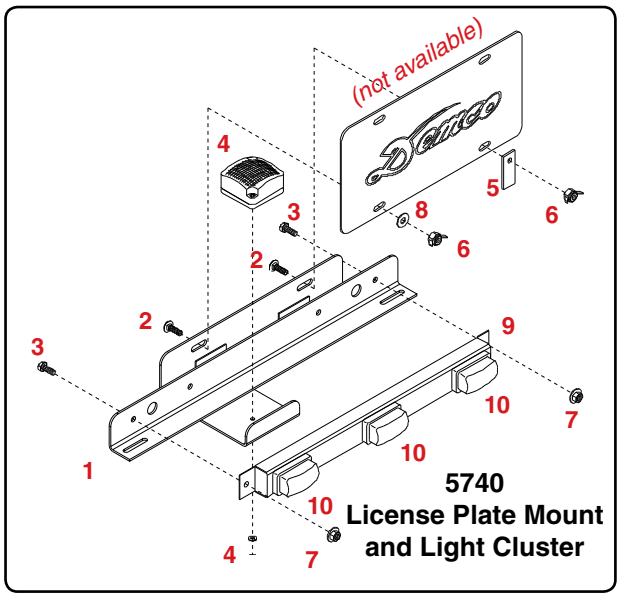

5740
License Plate Mount and Light Cluster

REF. NO.	PART NO.	QTY.	DESCRIPTION
	5740	**-**	**License Plate Bracket and Light Assembly**
1.	**04505-95**	1	License Plate and Light Cluster Bracket
2.	**04176**	2	1/4”-20UNC X 3/4” Carriage Bolt
3.	**02214**	2	#10 NC X 1/2” Slotted Truss Head Screw
4.	**02163**	1	Square License Plate Light w/Washer and Nut
-	**02164**	-	Clear License Plate Light Lens Only
5.	**02580-95**	1	License Plate Clip
6.	**02770**	2	1/4”-20UNC Nylon Insert Wing Nut
7.	**02205**	2	#10 NC Nylon Lock Nut
8.	**00214**	1	1/4”-20UNC Flat Washer
9.	**11687***	1	3 Cluster Light Bar Only (No Lights)
10.	**11688***	3	Red LED Light
-	**11655***	1	3 Cluster LED Wiring Harness
-	**11616**	1	Grommet, 5/8” OD x 3/8” x 1/8” Thick
-	**5765**	-	3 Cluster LED Light Assembly (* Included)

Please order replacement parts by PART NO. and DESCRIPTION.

Fender Assembly

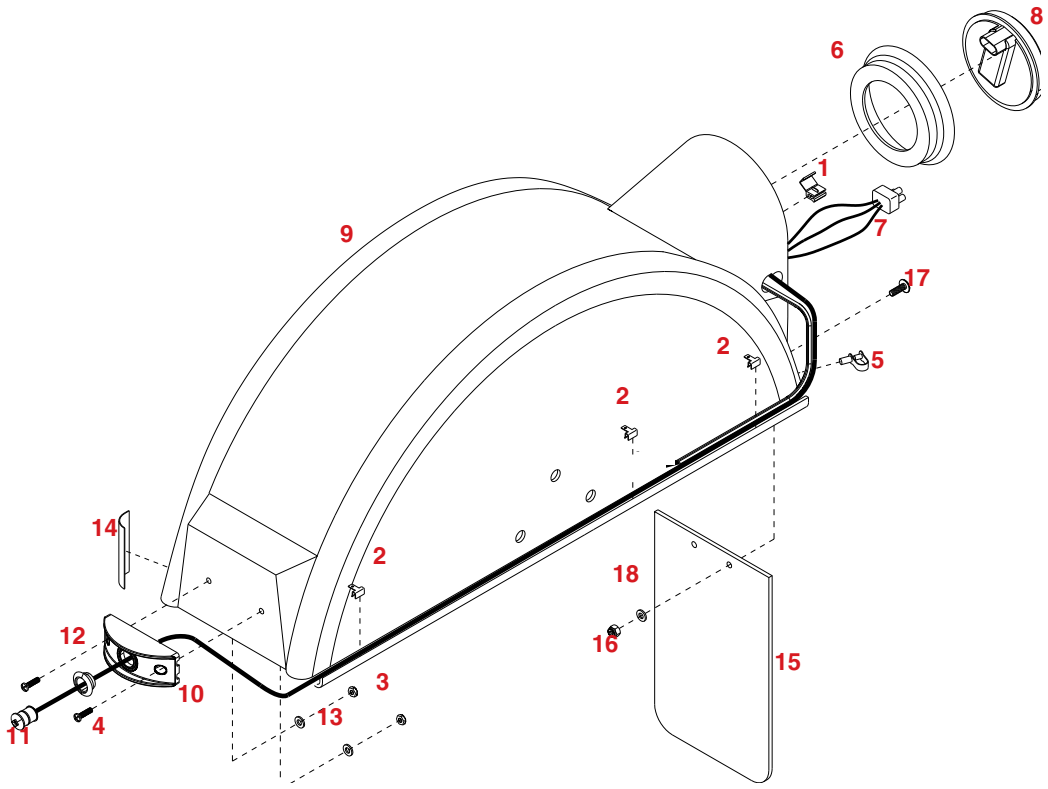

PARTS LIST

REF. NO.	PART NO.	QTY.	DESCRIPTION
	5982	-	**Left Large Fender Assembly**
	5983	-	**Right Large Fender Assembly**
1.	**01883**	2	Wire Splicer
2.	**04425**	3	Tinnerman U-clamp
3.	**02205**	2	Nut, #10-24 Nylon Lock
4.	**00568**	2	Screw, #10-24 x 1/2” Pan Head
5.	**05443**	1	Nylon Cable Hanger
6.	**05447**	1	4” Light Grommet
7.	**11206**	1	Tail Light Wire Harness
8.	**11209**	1	4” LED Tail Light
9.	**14117**	1	Left Fender Assembly
-	**14118**	1	Right Fender Assembly
10.	**13509**	1	3/4” LED Marker Base Mount
11.	**13508**	1	Yellow 3/4” LED Marker Light
12.	**13658**	1	Grommet f/ 3/4” LED Light
13.	**07490**	2	3/16” Washer
14.	**04508**	1	Amber Reflector
-	**04804**	1	Red Reflector
15.	**01769**	1	Kar Kaddy Mud Flap
16.	**02772**	2	1/4” Nylon Lock Nut
17.	**05338**	2	1/4” Slotted Truss Head Bolt
18.	**00214**	2	1/4” Flat Washer

Please order replacement parts by PART NO. and DESCRIPTION.

OPTIONAL SPARE TIRE and MOUNT PARTS BREAKDOWN

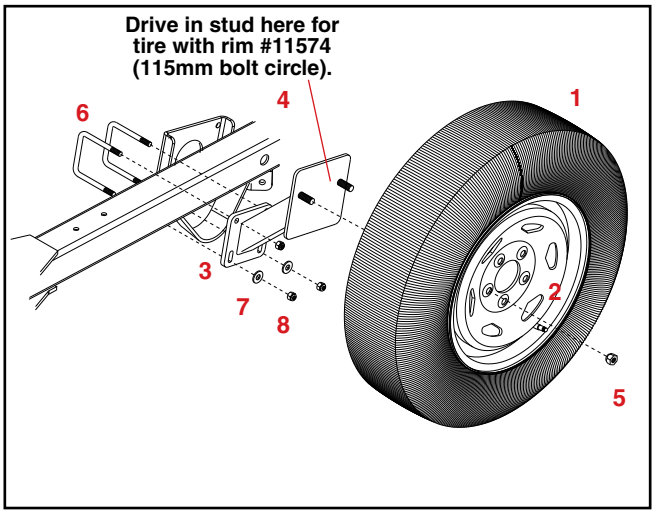

* All options may not mount on tow dolly simultaneously.*

PARTS LIST

-	**5968**	1	**Optional Spare Tire and Rim**
1.	**13989**	1	ST205/75R 14"x"C" ROWL Radial Tire
2.	**11574**	1	5.5" x 14" Chrome Rim 115mm Bolt Circle
	RKSTM	1	**Spare Tire Mounting Bracket**
3.	**02193-30**	1	Spare Tire Bracket
4.	**02917**	1	Stud Bolt (12mm x 1.5)
5.	**02933**	2	Wheel Nut (12mm) Chrome
6.	**02759**	2	3/8"-16UNC Square U-Bolt
7.	**00059**	2	3/8" Flatwasher
8.	**02592**	4	3/8"-16UNC Nylon Insert Locknut

Please order replacement parts by PART NO. & DESCRIPTION.

OPTIONAL LIGHT BAR PARTS BREAKDOWN

KKLB LIGHT BAR PARTS LIST

ITEM	PART #	QTY	DESCRIPTION
1	**01772**	2	NYLON SECURITY STRAP W/ HOOKS & TIGHTENER
2	**01857**	1	LEFT TAIL/BRAKE & SIGNAL LIGHT W/ LENSES
3	**01773**	1	BROWN JUMPER WIRE
4	**01886**	4	WIRE HOLDER (METAL)
5	**02385-30**	1	LIGHT BAR FRAMEWORK
6	**02386-30**	2	ADJUSTABLE LIGHT BRACKET
7	**01856**	1	RIGHT TAIL/BRAKE & SIGNAL LIGHT W/ LENSES
8	**02772**	10	1/4"-20UNC NYLON INSERT LOCKNUT
9	**00092**	6	1/4"-20UNC X 1/2" HEX HEAD BOLT
10	**01777-30**	2	LIGHT BAR "Z" BRACKET
11	**01778**	4	3 SUCTION CUP W/ BOLT (#13)
12	**02198**	1	LIGHT BAR WIRING HARNESS (NEW STYLE)
13	**00068**	4	1/4"-20UNC X 3/4" HEX HEAD BOLT
14	**01911**	-	LARGE RED LENS
15	**01912**	-	SMALL RED LENS
16	**01890**	-	CLEAR LENS
17	**02316**	1	GROUND WIRE (NOT SHOWN)
18	**01883**	1	WIRE SPLICE (NOT SHOWN)

Please order replacement parts by PART NO. and DESCRIPTION.

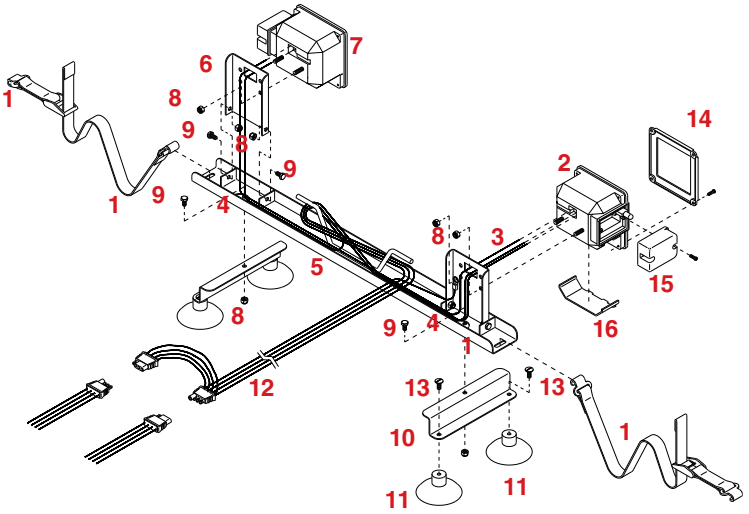

COLOR CODE FOR WIRING HARNESS

WHITE	Ground
BROWN	Tail Lights, License Plate Lights, Light Cluster Bar & Clearance Lights
YELLOW	Left Turn and Stop
GREEN	Right Turn and Stop

OPTIONAL SENTRY DEFLECTOR (5950) PARTS BREAKDOWN

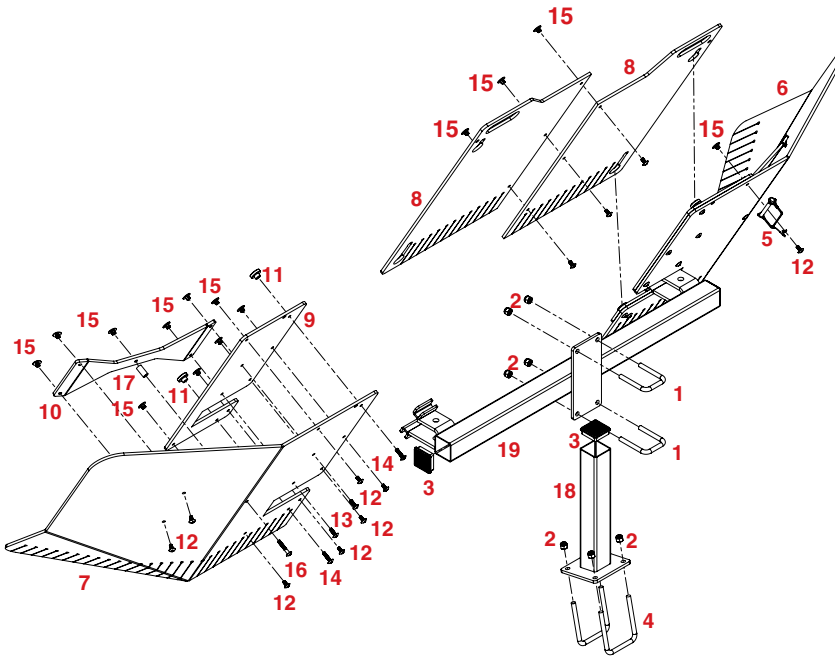

SENTRY DEFLECTOR (5950) PARTS LIST

ITEM	PART #	DESCRIPTION	QTY
1	**02128**	U-BOLT, SQ, .375NC X 2.063 X 3.00	2
2	**02592**	NUT, .375NC NYLON LOCK	8
3	**04193**	CAP PLUG SQUARE 2 X 18 GA	3
4	**02759**	3/8" -16UNC SQUARE U-BOLT	2
5	**05337**	SAFETY LOCK PIN ASSEMBLY	1
6	**10131**	ROCK GUARD, LEFT	1
7	**10132**	ROCK GUARD, RIGHT	1
8	**10133**	DEFLECTOR CENTER SECTION	2
9	**10134**	DEFLECTOR MOUNTING PLATE	2
10	**10135**	DEFLECTOR BRACE/HANDLE	2
11	**10136**	RETAINER BUTTON	4
12	**10183**	SCREW, .25 NC X .50 PHILLIPS HEAD	17
13	**10184**	SCREW, .25 NC X .75 PHILLIPS HEAD	4
14	**10185**	SCREW, .25 NC X 1.00 PHILLIPS HEAD	4
15	**10186**	T-NUT, .25 NC X .41 BARREL	23
16	**11264**	SCREW, .25 NC X 1.50 PHILLIPS HEAD	2
17	**11265**	SPACER BUSHING	2
18	**13731-81**	UPRIGHT POST MOUNT	1
19	**13732-81**	SENTRY CROSSMEMBER TD MNT	1

Please order replacement parts by PART NO. and DESCRIPTION.

4010 320th St., BOYDEN, IA. 51234
PH: (712) 725-2311
FAX: (712) 725-2380
TOLL FREE: 1-800-54DEMCO (1-800-543-3626)
www.demco-products.com

Go online to www.demco-products.com for Demco warranty policies, operator manuals & product registration.